PUBLISHED: 21-NOV-2016
2022.0 DEFENDER (LE), 307-02

TRANSMISSION/TRANSAXLE COOLING - VEHICLES WITH: 8HP70 8-SPEED AUTOMATIC TRANSMISSION AWD

SPECIFICATIONS

ITEM	SPECIFICATION
Transmission fluid	Shell L12108

Torque Specifications

DESCRIPTION	NM	LB-FT	LB-IN
Transmission fluid cooler bolt	6	4	-
Transmission fluid cooler tubes to transmission housing bolt	22	17	-
Transmission fluid cooler tube bracket to engine oil pan retaining nut	9	7	-
Turbocharger bypass valve bracket bolts 3.0 TD V6	9	7	-
Turbocharger bypass valve clamp 3.0 TD V6	3.5	-	31
Transmission fluid level check bolt	35	26	-

transmissionmanuals.com

PUBLISHED: 21-NOV-2016
2022.0 DEFENDER (LE), 308-07

FOUR-WHEEL DRIVE SYSTEMS

SPECIFICATIONS

Torque Specifications

NOTE:

* New bolts must be used when a new component is installed.

DESCRIPTION	NM	LB-FT
* Transfer case shift motor bolts	35	26
* Transfer case clutch control solenoid bolts	5	4
* High/Low range position sensor bolts	5	4
Transmission undershield M10 bolts	60	44
Transmission undershield M6 bolts	10	7
Transmission support crossmember M12 bolts	110	81
Transmission support crossmember M8 bolt	24	17

transmissionmanuals.com

PUBLISHED: 15-AUG-2016
2022.0 DEFENDER (LE), 308-07

FOUR-WHEEL DRIVE SYSTEMS

HIGH/LOW RANGE SENSOR (G2003291)

REMOVAL AND INSTALLATION

41.30.07	SENSOR - POSITION - HI/LOW RATIO - RENEW	ALL DERIVATIVES	0.4	USED WITHINS

REMOVAL

NOTE:

- Some variation in the illustrations may occur, but the essential information is always correct.
- Some components shown removed for clarity.

1. Disconnect the battery ground cable.
   Refer to: Specifications (414-00, Specifications).

2. **WARNING:**

   Make sure to support the vehicle with axle stands.

   Raise and support the vehicle.

transmissionmanuals

3.

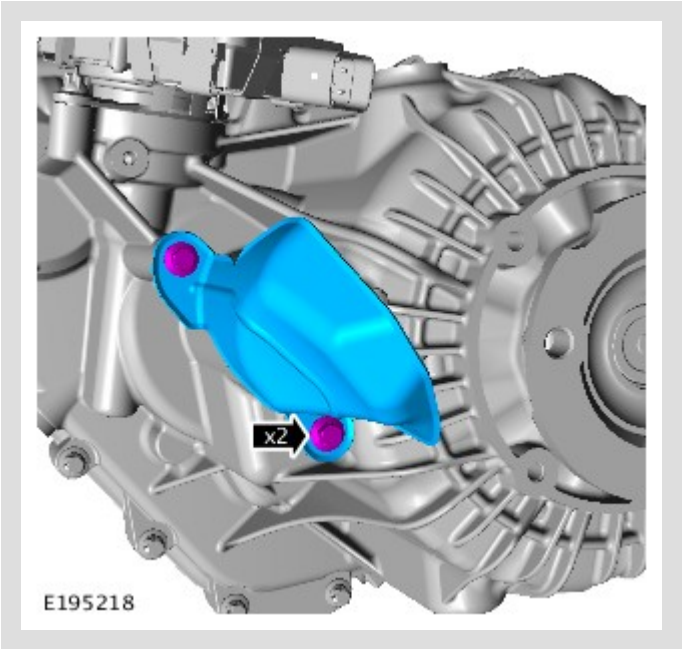

Remove the heat shield if installed.

4.

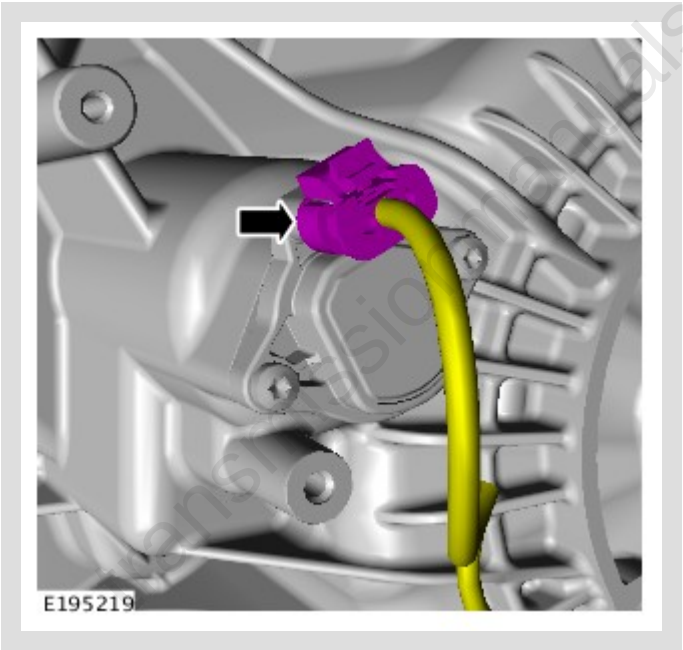

Disconnect the electrical connector.

5.

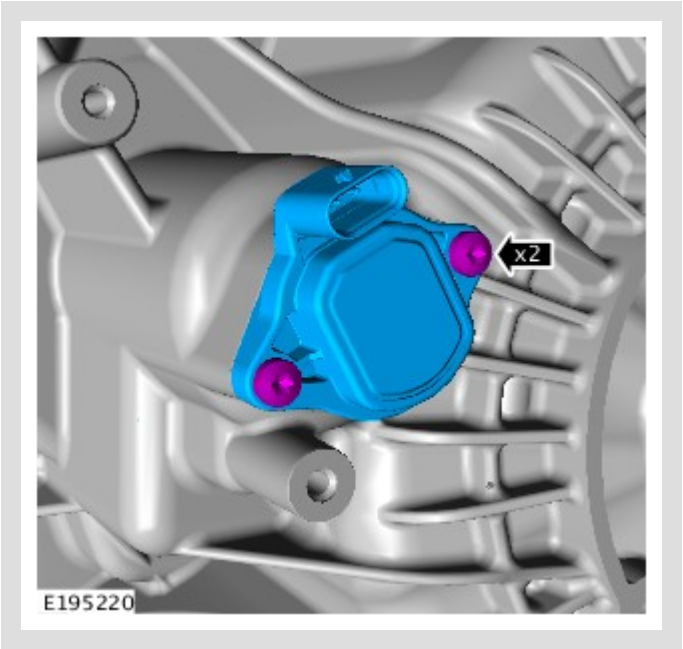

Remove the sensor.

transmissionmanuals.com

INSTALLATION

1.

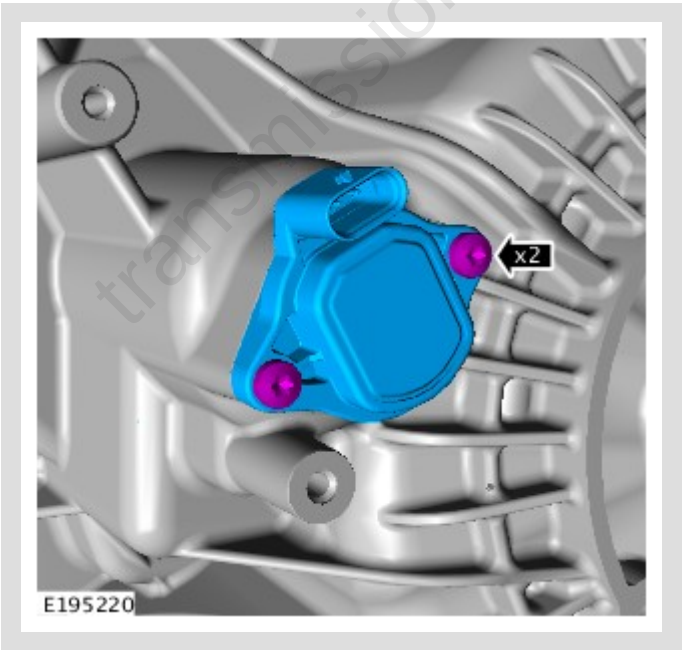

- Install the sensor.
- *Torque:* **5 Nm**

2.

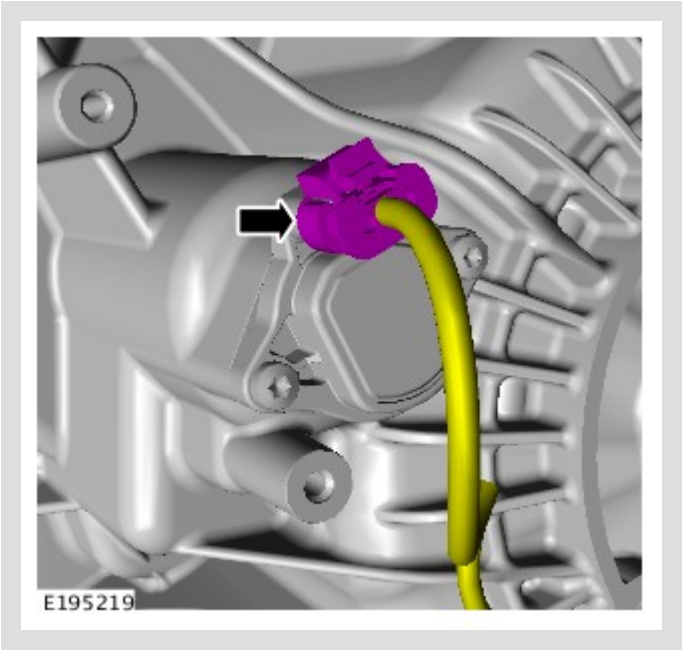

Connect the electrical connector.

3.

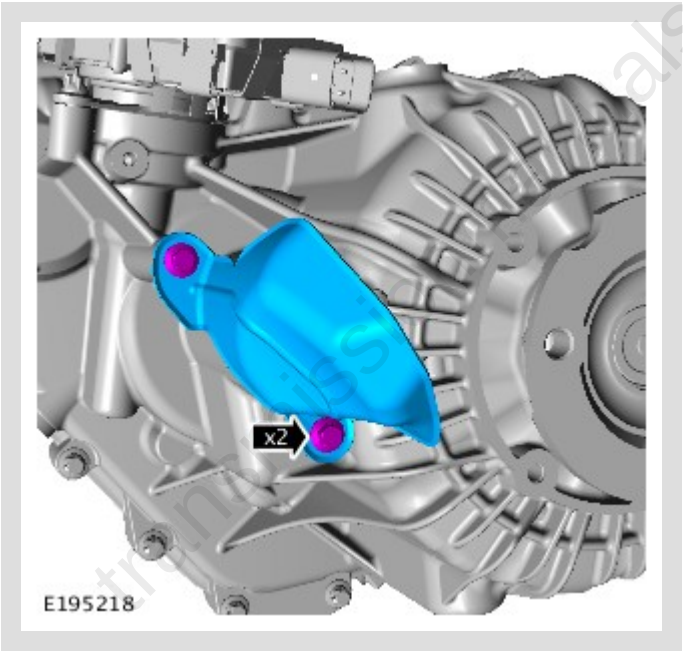

- Install the heat shield if previously removed.
- *Torque:* **8 Nm**

4.

WARNING:

Make sure to support the vehicle with axle stands.

Raise and support the vehicle.

5. Connect the battery ground cable.
Refer to: Specifications (414-00, Specifications).

6.

- Connect the Land Rover approved diagnostic equipment.
- Start the service function "transfer case-absolute position sensor replacement".
- Clear any Diagnostic Trouble Codes (DTCs) after calibration and check for correct operation.

transmissionmanuals.com

PUBLISHED: 21-NOV-2016
2022.0 DEFENDER (LE), 308-07

TRANSFER CASE - [+] SINGLE SPEED TRANSFER CASE

DESCRIPTION AND OPERATION

COMPONENT LOCATION

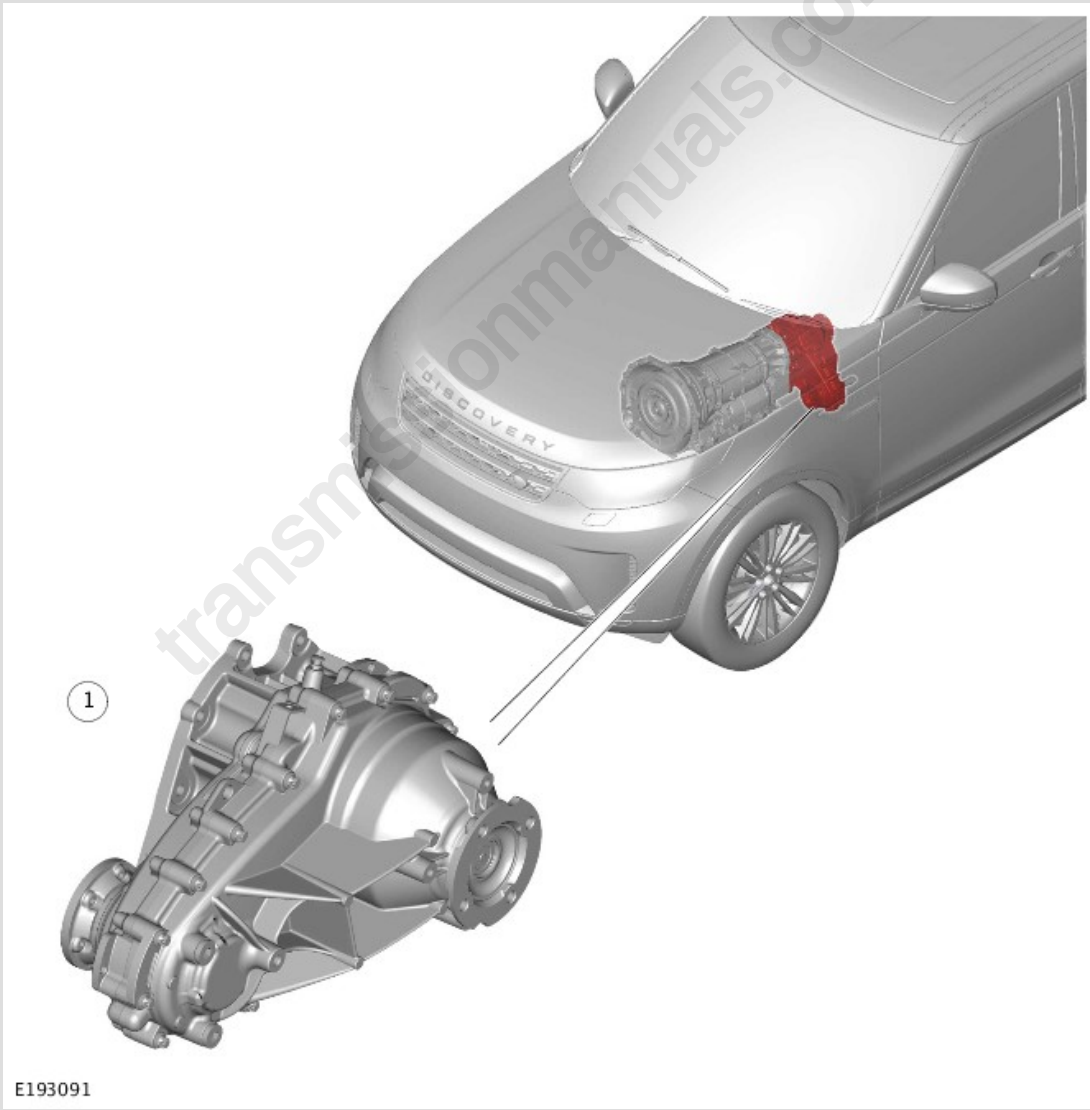

transmissionmanuals.com

ITEM	DESCRIPTION
1	Single speed transfer case

OVERVIEW

The Single speed transfer case is full time, permanent four-wheel-drive unit, with 40 /60 torque distribution to the front and rear driveshafts.

Common components with Twin-speed Transfer Case:

- Front and Rear Flanges
- Main Seals
- Main Bearings
- Fill/Drain Plugs
- Fixings and Torques
- Breather
- Tachograph encoder (optional).

The improvements of the new Single speed Transfer Case are the following:

- Different oil specification - Castrol BOT850 with friction modifier
- Reduced Complexity
- No electronic controls
- Optimized dynamic vehicle behavior.

The Single speed TC consists of 25 components, the weight and inertia were reduced for improved economy.

A unique type of grease, Weicon anti-seize montagepaste grau TL 7391, must be applied to the transfer case input shaft spline when installing the transfer case.

transmissionmanuals.com

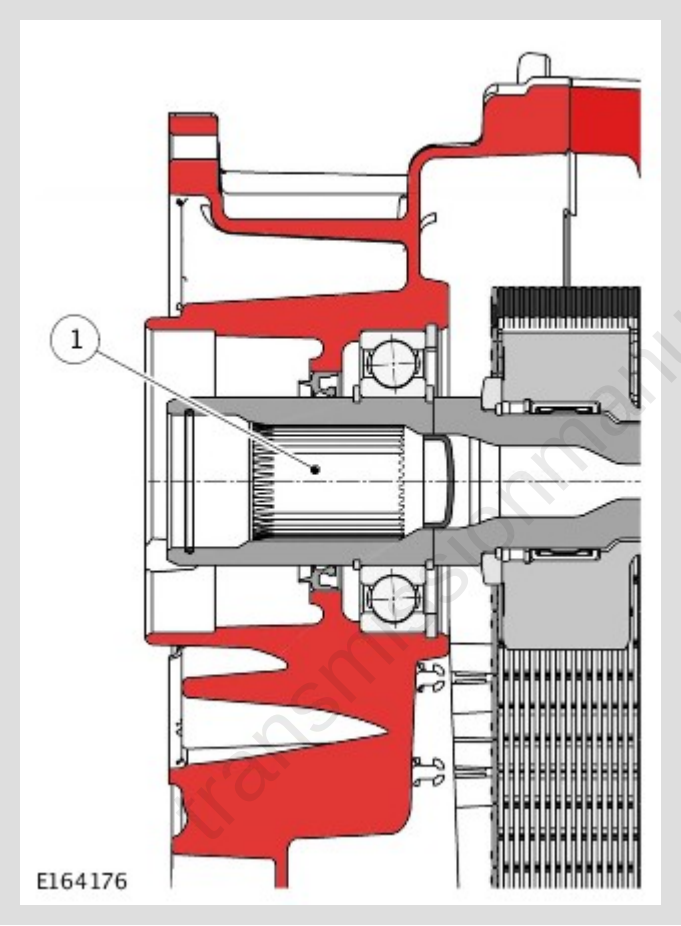

ITEM	DESCRIPTION
1	Input shaft spline

SYSTEM OPERATION

The torque input from the transmission is passed to the transfer case input shaft. The input shaft connected directly to the differential coupling. The differential coupling connects to the housing which splits the torque between the internal gear and the sun gear by the six planetary gears. The internal gear is connected and passes the torque

to the rear output flange. The sun gear is connected to the chain drive sprocket and passes the torque to the front output flange via the chain.

The center differential responds to the torque changes at the axles. The basic torque distribution between the front and rear axles is 40/60% at normal drive conditions. If an axle loses traction, the driving torque is redirected instantaneously to the other axle between 65/35% Front/Rear and 20/80% Front/Rear.

DESCRIPTION

TRANSFER CASE - SECTIONAL VIEW

NOTE:

Some variation in the illustrations may occur, but the essential information is always correct.

transmissionmanuals.com

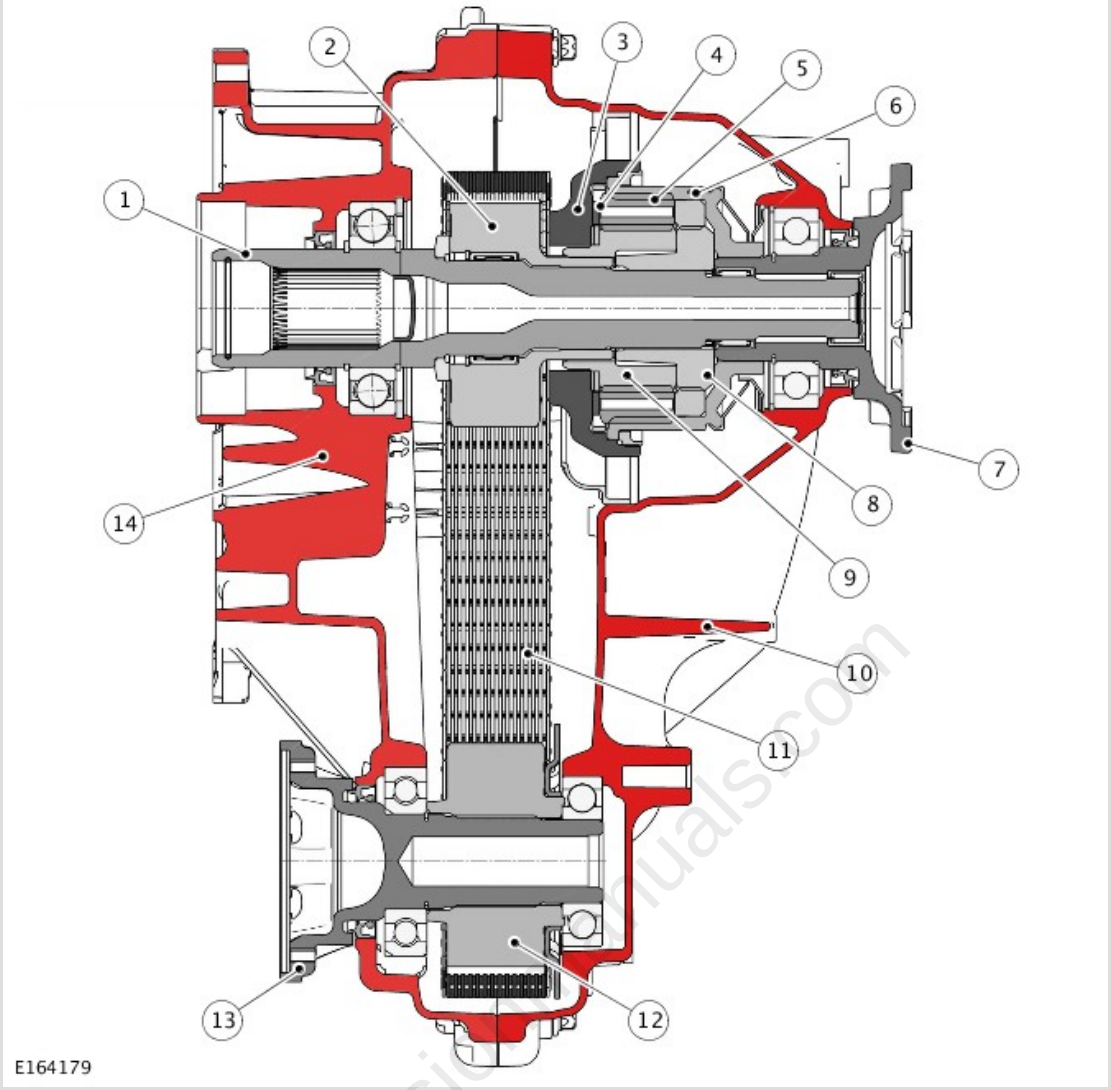

ITEM	DESCRIPTION
1	Input shaft
2	Drive chain sprocket
3	Center differential cap
4	Friction washer
5	Planetary gear (6 off)
6	Center differential internal gear
7	Rear output flange
8	Center differential coupling
9	Center differential sun gear
10	Rear housing assembly
11	Drive chain
12	Drive chain sprocket - Front output

13	Front output flange
14	Front housing assembly

TRANSFER CASE POWER FLOW

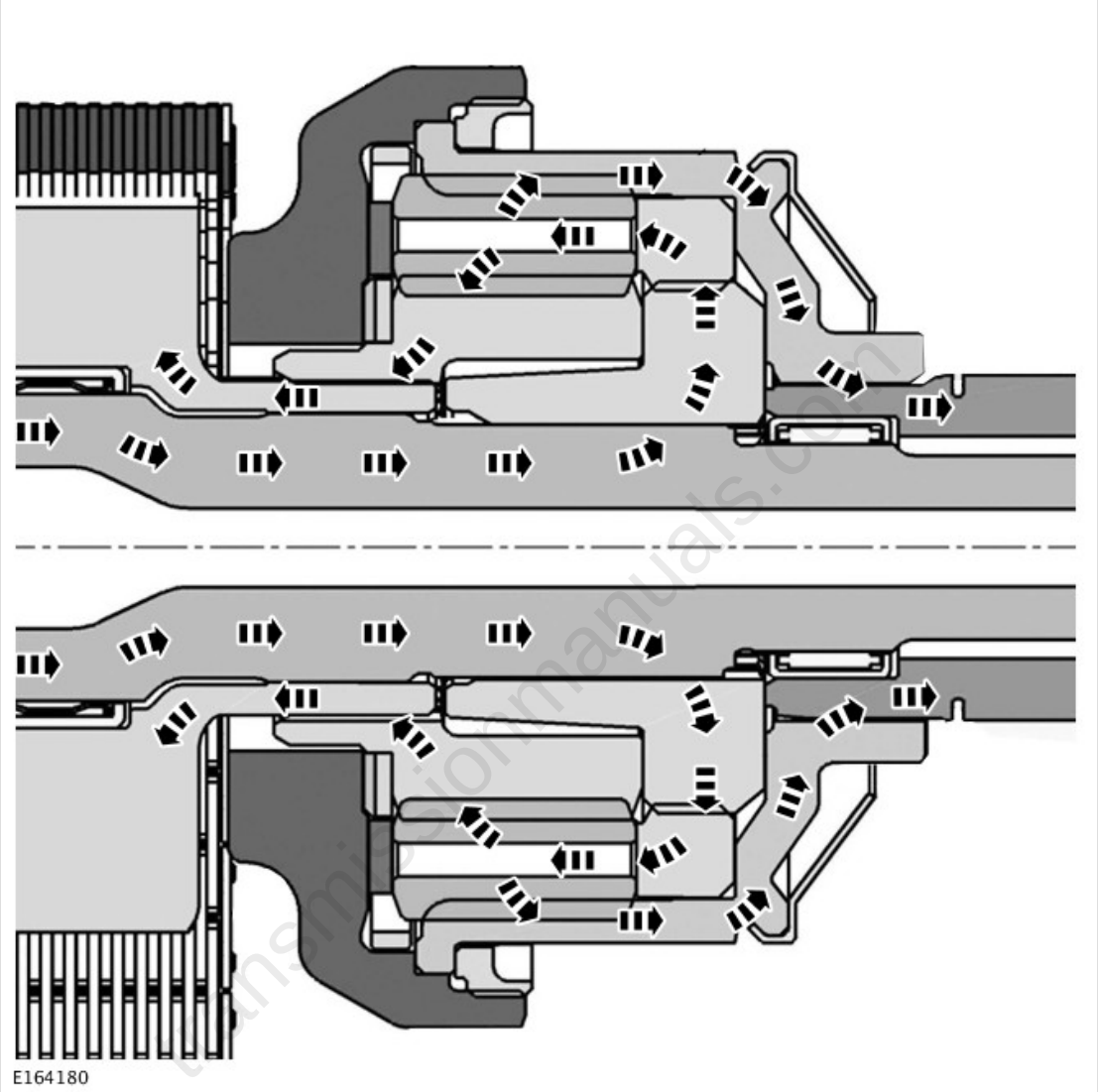

Input torque from the transmission is transferred to the input shaft of the transfer case and then onto the differential coupling. The coupling is connected to the differential housing. The planetary gears are held in place by the differential housing, which are connected to the differential internal gear, and the sun gear. The torque is then distributed to both the differential internal gear, and the sun gear, which are connected to the outputs of the transfer case. The internal gear is connected directly to the rear output flange, the sun gear is connected directly to the drive chain sprocket and therefore to the chain drive, which provides front output flange rotation.

Front Casing Assembly

The front casing assembly provides the location for the input shaft bearing and the front output flange bearing. It is also equipped with threaded holes to mount the

chassis mounting bush, 2 lifting eyes and a breather cartridge for the transfer case breather pipe. The breather pipe allows equalization between atmospheric and internal transfer case pressure.

The front casing has an additional boss cast on the inside. The boss is used to mount two snubbers - one on drive side of the chain and one on the coast side - which are secured with 2 screws. The snubbers are suppressing chain vibrations which can occur under medium acceleration conditions, therefore improving Noise, Vibration and Harshness (NVH) issues. During normal operation the chain does not contact the snubbers.

Rear Casing Assembly

The rear casing assembly provides the location for the rear output flange bearing, the oil fill and drain plug. Fins are cast into the rear casing assembly to improve heat dissipation. The part number & serial number are printed on a bar code label.

Chain Drive

The chain-drive transfers drive from the center differential to the front output flange. A 3/8" pitch chain connects the sprocket on the transfer case input shaft with the sprocket on the front output flange. As both sprockets have the same number of teeth, the rotational speed of both sprockets is identical. During the vehicle operation the chain delivers the oil upwards and provides the lubrication for the input shaft, the output flange bearings, and the center differential assembly.

NOTE:

When installing or replacing the chain, the BLUE guide links must be facing the center differential, towards the rear output flange.

Center differential

transmissionmanuals.com

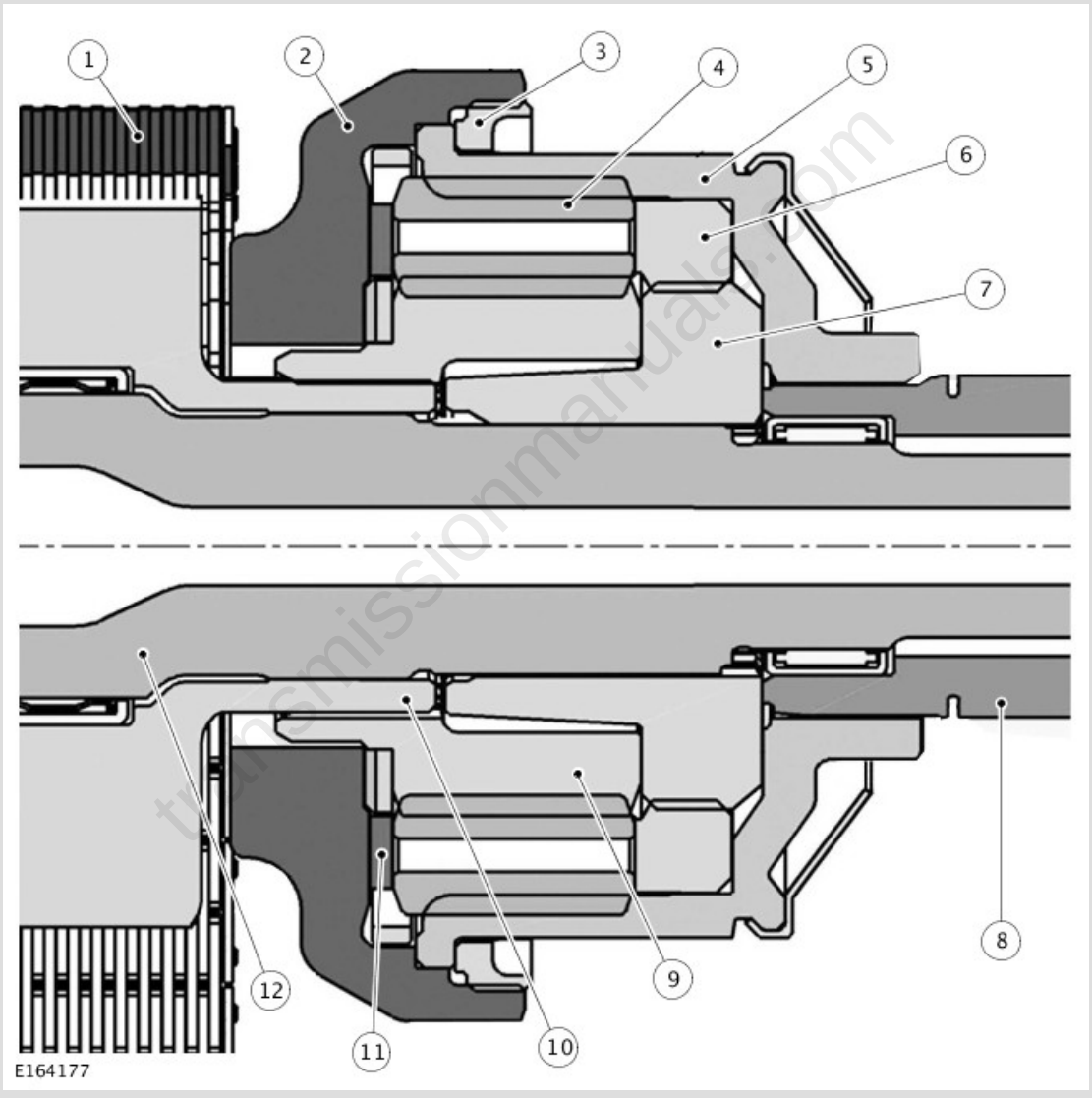

ITEM	DESCRIPTION
1	Drive chain
2	Center differential cover
3	Fixing nut
4	Planetary gear (6 off)

5	Center differential internal gear
6	Center differential housing
7	Coupling
8	Rear output shaft
9	Center differential sun gear
10	Drive chain sprocket
11	Friction washer
12	Input shaft

The center differential assembly is the primary feature of the transfer case. Torque is transmitted through the center differential coupling and housing, and distributed by the planetary gear set to the differential gears and the front and rear output flanges.

The assembly comprises 6 planetary gears, which are equally spaced within the center differential housing. The planetary gears are supported in both directions by the differential casing and the differential cap.

The different basic torque distribution results from the different circle diameters of the internal gear and the sun gear. If an axle loses traction, the bias between the casing, the planetary gears and the cap generates internal friction inside the differential, and the torque directed to the other axle.

transmissionmanuals.com

PUBLISHED: 16-MAR-2017
2022.0 DEFENDER (LE), 308-07

TRANSFER CASE - [+] SINGLE SPEED TRANSFER CASE

DIAGNOSIS AND TESTING

PRINCIPLES OF OPERATION

For a detailed description of the Transfer Case - Single speed, refer to the relevant Description and Operation section in the workshop manual.
REFER to: Transfer Case (308-07 Transfer Case - Vehicles With: Single Speed Transfer Case, Description and Operation).

INSPECTION AND VERIFICATION

CAUTION:

Diagnosis by substitution from a donor vehicle is **NOT** acceptable. Substitution of control modules does not guarantee confirmation of a fault, and may also cause additional faults in the vehicle being tested and/or the donor vehicle.

NOTE:

If the control module or a component is suspect and the vehicle remains under manufacturer warranty, refer to the Warranty Policy and Procedures manual, or determine if any prior approval programme is in operation, prior to the installation of a new module/component.

1. Verify the customer concern

1. Visually inspect for obvious signs of damage and system integrity

Visual Inspection

transmissionmanuals.com

MECHANICAL
▪ Transfer case ▪ Driveshafts ▪ Differentials ▪ Halfshafts ▪ Fluid leaks

1. If an obvious cause for an observed or reported concern is found, correct the cause (if possible) before proceeding to the next step

1. If the cause is not visually evident, verify the symptom and refer to the Symptom Chart, alternatively check for Diagnostic Trouble Codes (DTCs) and refer to the DTC Index

1. Check DDW for open campaigns. Refer to the corresponding bulletins and SSMs which may be valid for the specific customer complaint and carry out the recommendations as required

JUDDER DURING LOW SPEED MANOEUVRING WITH HIGH STEERING INPUTS

At full lock, there will be some tyre scrubbing; as the temperature drops, scrubbing may be experienced as stick/slip judder. This is normal and does not require any service intervention

transmissionmanuals.com

PUBLISHED: 21-NOV-2016
2022.0 DEFENDER (LE), 308-07

TRANSFER CASE - [+] SINGLE SPEED TRANSFER CASE

SPECIFICATIONS

Sealants and Lubricants

ITEM	SPECIFICATION
* Recommended oil	Castrol BOT850
Capacity - Wet and dry fill	0.75 litres, (1.3 pints) (0.8 US quarts)
Input shaft splines grease	Weicon TL7391
Transfer case sealant	TL 7990 Hylomar black 102 or equivalent

CAUTION:

* Do not use any lubricant other than that specified

ITEM	SPECIFICATION
Model	ITC Torsen
Type	Single speed, permanent four wheel drive transfer box with 42 front / 58 rear (± 20% to either axle, dependant on traction) torque split across the centre differential
Ratio	1:1

Torque Specifications

DESCRIPTION	NM	LB-FT
Transfer case fluid drain plug	28	21
Transfer case fluid filler/level plug	28	21
Transmission support insulator to transfer case bolts	60	44
Transfer case to transmission bolts	45	33

transmissionmanuals.com

Transfer case bolts	35	26
Wiring bracket bolts	25	18
Earth strap bolt	25	18
*** Front driveshaft to transfer case output flange:**		
Stage 1	45	33
Stage 2	Further 90°	Further 90°

*** New 'patched' Torx bolts must be installed**

transmissionmanuals.com

PUBLISHED: 02-DEC-2016
2022.0 DEFENDER (LE), 308-07

TRANSFER CASE - [+] TWIN SPEED TRANSFER CASE

DESCRIPTION AND OPERATION

COMPONENT LOCATION

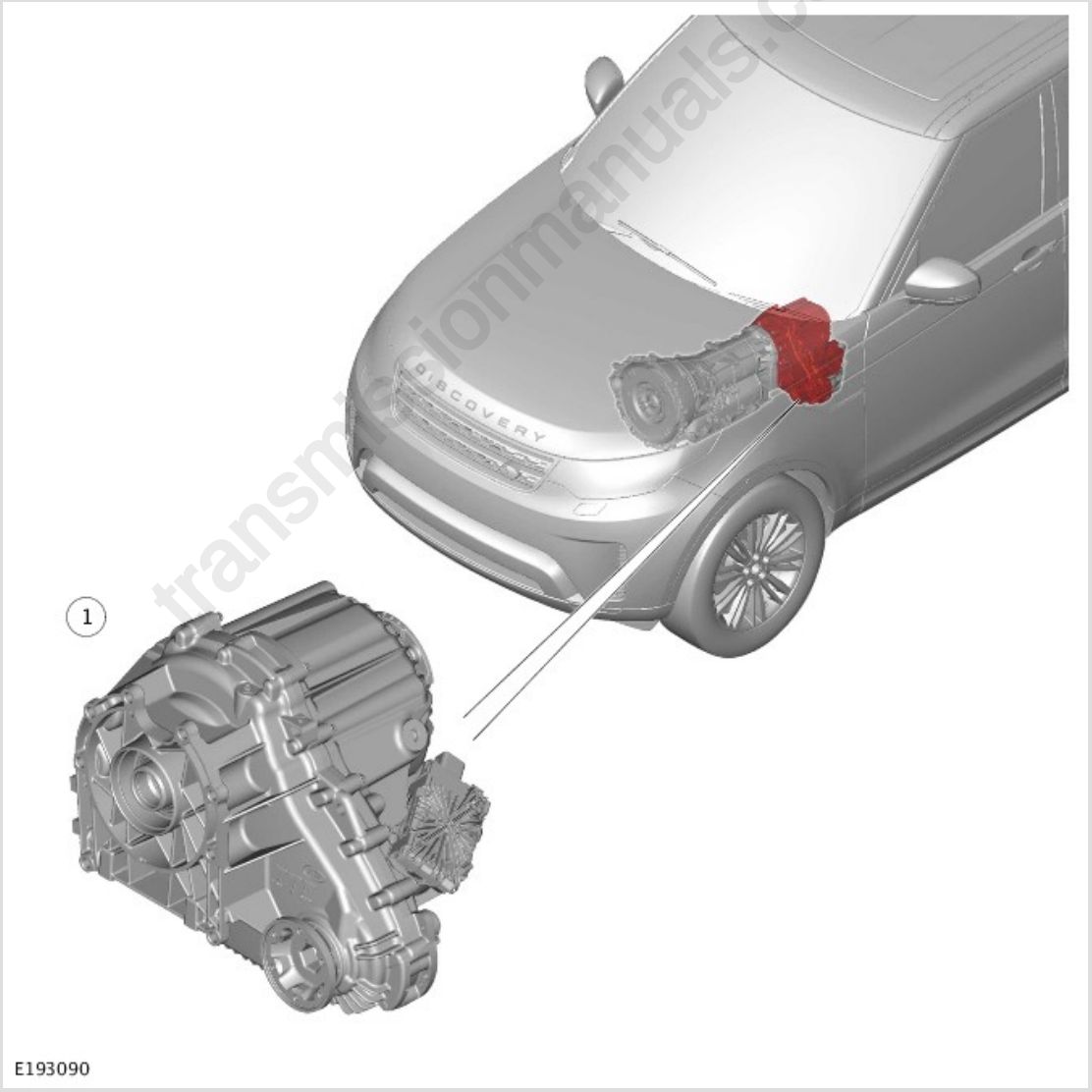

transmissionmanuals.com

ITEM	DESCRIPTION

1	Twin Speed Transfer Case (TC)

OVERVIEW

The twin speed transfer case is full time, permanent all wheel drive unit, with 50/50 torque distribution to the front and rear driveshafts. The transfer case is identical for all engine derivatives and supports the following features:

- Permanent all wheel drive with a bevel gear center differential, providing a 50:50 torque split
- Selectable high and low range for optimum on-road and off-road performance
- A pre-loading function, increasing locking torque with increased driving torque
- A slip controller to increase locking torque under off-road conditions and decrease locking torque for optimum comfort, for example during parking.

The twin speed transfer case is located under the vehicle and is mounted on the cross member, behind the automatic transmission.

The input torque is equally distributed via a bevel gear center differential. In order to provide an optimal torque distribution to each wheel in all driving conditions, the twin speed transfer case is equipped with an electronically controlled locking and torque-biasing device. This device detects wheel slip via various vehicle system inputs to the Transfer Case Control Module (TCCM) and locks the differential accordingly. The locking torque is applied through a multiplate clutch assembly.

A planetary gear set, located in the differential assembly, allows the driver to select high or low range. In low range, the planetary gear set provides a ratio of 2.93:1, which gives the vehicle an extremely low crawl speed for off-road driving and trailer towing. High range is a direct drive from the transmission output shaft and provides a 1:1 ratio.

The oil used in the transfer case is specially developed and contains unique additives, which enhance the transfer case operation. No other oil must be used in the transfer case.

A unique type of grease, fitting grease Weicon TL7391, must be applied to the transfer case input shaft spline when installing the transfer case.

transmissionmanuals.com

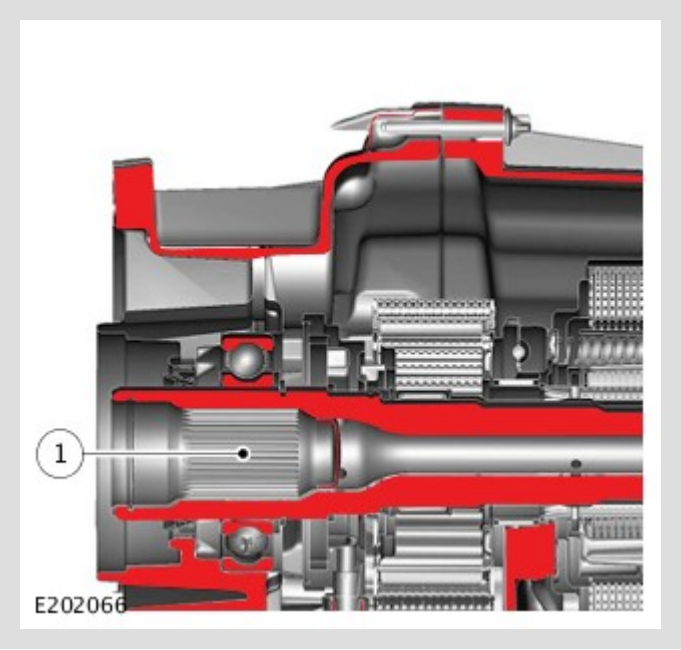

ITEM	DESCRIPTION
1	Input shaft spline

DESCRIPTION

TRANSFER CASE EXPLODED VIEW

transmissionmanuals.com

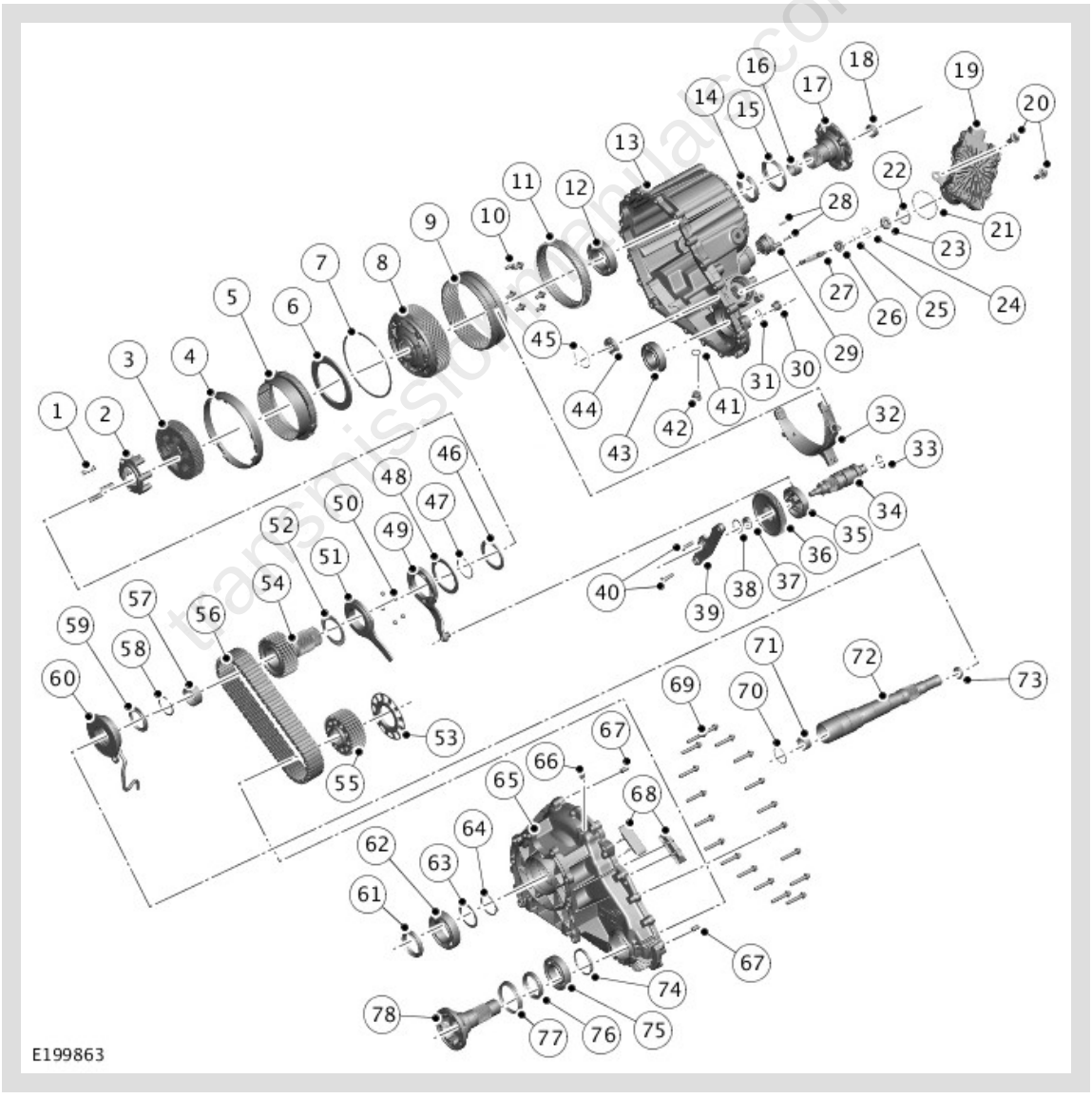

ITEM	DESCRIPTION
1	Synchronization spring (3 off)

2	Spring bracket
3	Multiplate clutch (10 – friction plates, 10 – steel plates)
4	Synchronization cup
5	Drum clutch
6	Plate clutch pack
7	Synchronization spring
8	Differential assembly
9	Shifting sleeve
10	Screw (6 off)
11	Synchronizer
12	Bearing
13	Rear housing
14	Transfer case output seal
15	O-ring seal
16	Bearing needle
17	Rear output flange
18	Bearing needle
19	Transfer Case Control Module (TCCM)
20	Bolt (2 off)
21	O-ring
22	O-ring
23	Transfer Case Control Module (TCCM) seal
24	Retaining ring
25	Retaining ring
26	Transfer case motor shaft bearing
27	Transfer case motor shaft
28	Bolt (2 off)
29	High/low range position sensor
30	Filler Plug
31	Shim
32	Shifting fork - High/Low range
33	Circlip

transmissionmanuals.com

34	Transfer case actuator shaft
35	Clutch control disc
36	Gear
37	Actuator shaft bearing
38	Circlip
39	Actuator shaft bearing bracket
40	Bolt (2 off)
41	Shim
42	Drain plug
43	Transfer case housing bearing
44	Bearing
45	Circlip
46	Retaining ring
47	Retaining ring
48	Bearing needle
49	Clutch lever
50	Ball (5 off)
51	Fixed lever
52	Bearing needle
53	Reluctor ring
54	Drive chain sprocket
55	Drive chain sprocket
56	Drive chain
57	Needle roller bearing
58	Retaining ring
59	Oil pump - spacer ring
60	Oil pump
61	O-ring seal
62	Bearing Retaining ring
63	Shim
64	Circlip
65	Front housing

transmissionmanuals.com

66	Adapter vent Screw (2 off)
67	Dowel pin (2 off)
68	Chain guide (2 off)
69	Bolt (19 off)
70	O-ring
71	Input shaft plug
72	Input shaft
73	Needle roller bearing
74	Circlip
75	Front output flange bearing
76	Front output flange seal
77	Front output flange seal ring
78	Front output flange

TRANSFER CASE - SECTIONAL VIEW

transmissionmanuals.com

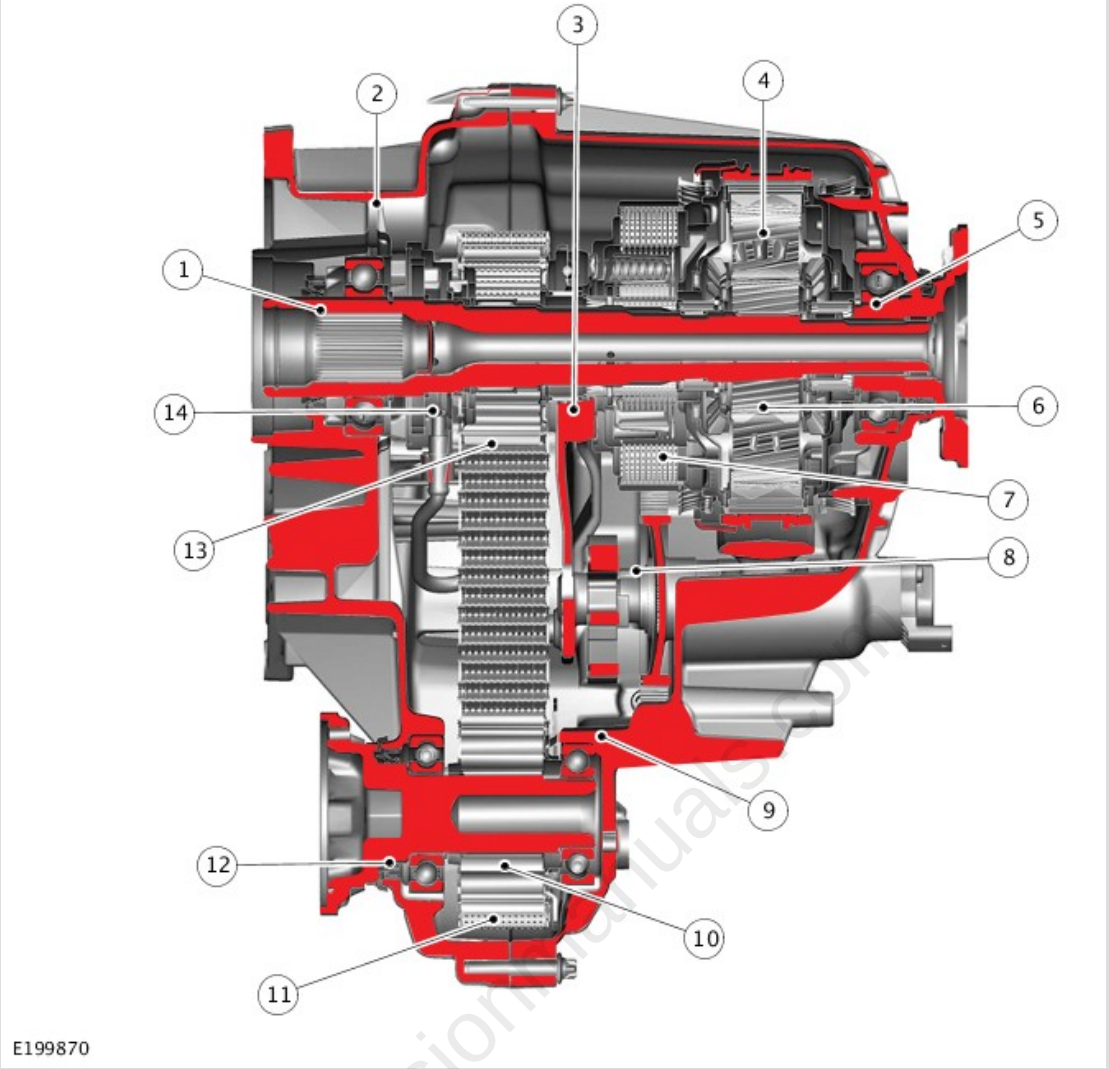

ITEM	DESCRIPTION
1	Input shaft
2	Front housing assembly
3	Clutch lever
4	Planetary gear set
5	Rear output flange
6	Center differential assembly
7	Multiplate clutch
8	Actuation shaft
9	Rear housing assembly
10	Front output sprocket
11	Chain drive
12	Front output flange

13	Drive sprocket
14	Oil pump assembly

TRANSFER CASE POWER FLOW

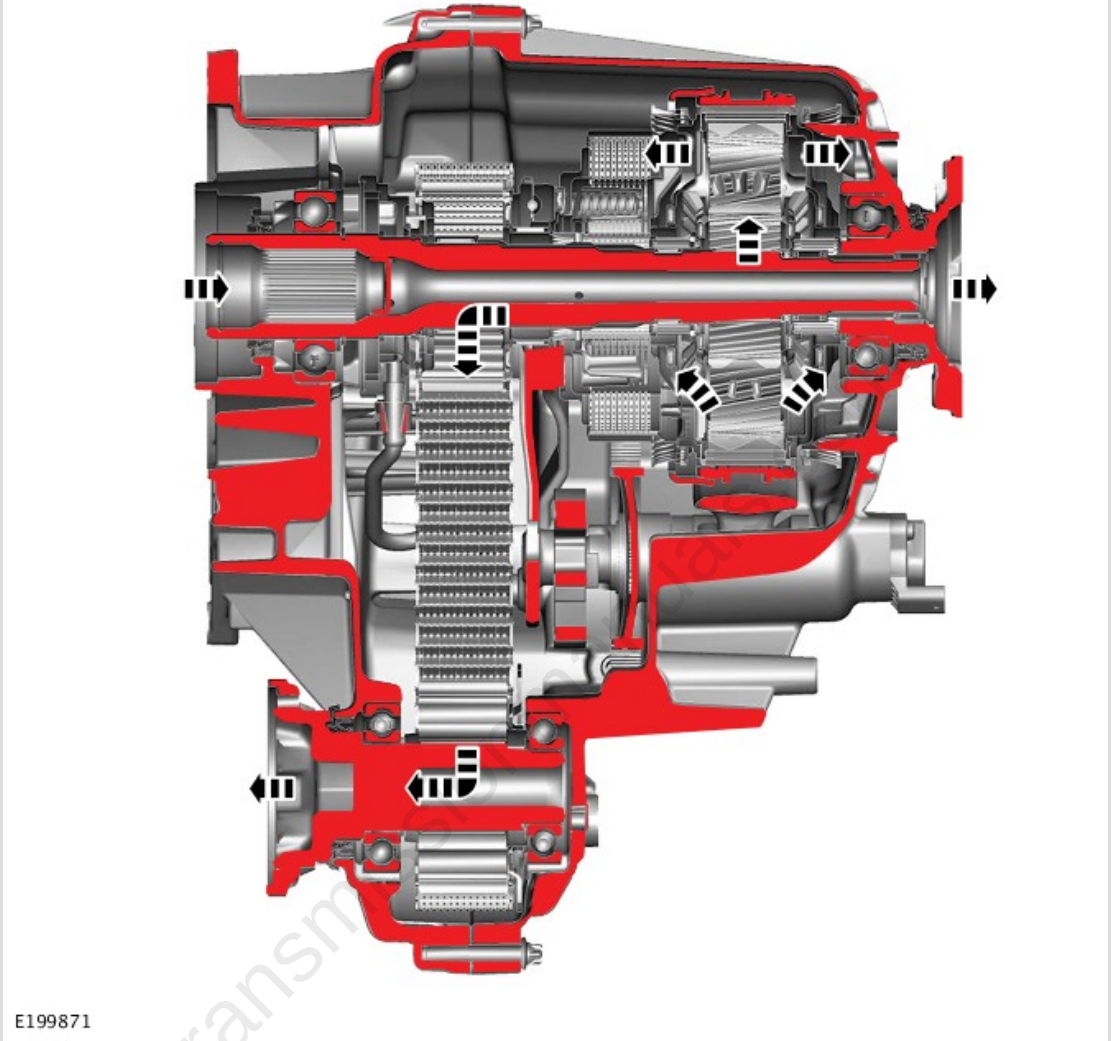

Output torque from the transmission is transferred to the input shaft of the transfer case and then onto the planetary sun gear and planetary pinion gears. The planetary pinion gears are held in place by the planetary pinion shafts, which are connected to the differential carrier, and drive the differential pinion gears. The torque is then distributed to both the front and rear differential side gear, which are connected to the outputs of the transfer case. The rear differential side gear is connected directly to the rear output flange. The front differential side gear is connected to the chain drive sprocket and therefore to the chain drive, which provides front output flange rotation.

Front Casing Assembly

The front casing assembly provides the location for the input shaft bearing, the front output flange bearing and the oil pump. It is also equipped with threaded holes to mount the chassis mounting bush, two lifting eyes and a breather cartridge for the

transfer case breather pipe. The breather pipe allows equalization between atmospheric and internal transfer case pressure.

The front casing has two snubbers, one on drive side of the chain and one on the coast side, which are secured with two screws. The snubbers are suppressing chain vibrations which can occur under medium acceleration conditions, therefore improving Noise, Vibration and Harshness (NVH) issues. During normal operation the drive chain does not contact the snubbers.

Oil Pump

An oil pump assembly is located in the front casing to provide lubrication for the bearings and rotary components through cross-drillings in the input shaft. A flat-sectioned coupling on the input shaft drives the rotor of the pump, the stator is fixed to the front housing assembly. A tube is attached to the pump, which leads into a calm suction area at the bottom of the two casing assemblies. The collector magnet in the suction area of the pump collects any metallic debris.

Rear Casing Assembly

The rear casing assembly provides the location for the rear output flange bearing, the transfer case motor and the oil filler and drain plug. Fins are cast into the rear casing assembly to improve heat dissipation. The part number and serial number are printed on a bar code label, which is bonded to the rear casing assembly.

Chain Drive

The chain-drive transfers drive from the center differential to the front output flange. The drive chain connects the drive chain sprocket on the transfer case input shaft with the drive chain sprocket on the front output flange. As both sprockets have the same number of teeth, the rotational speed of both sprockets is identical.

Center Differential

transmissionmanuals.com

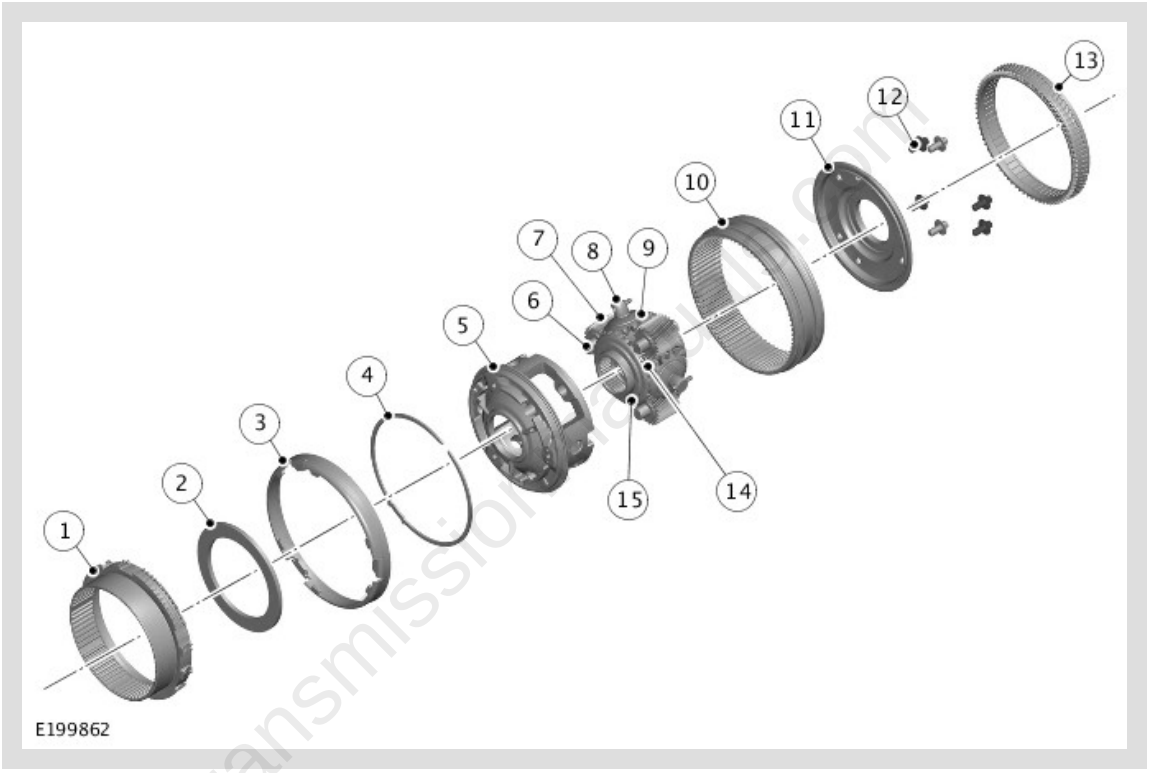

ITEM	DESCRIPTION
1	Drum clutch
2	Plate clutch pack
3	Synchronization cup
4	Synchronization spring
5	Differential carrier
6	Planetary pinion gear shaft (3 off)
7	Planetary pinion gear (3 off)
8	Pinion gear shaft (3 off)
9	Pinion gear (3 off)

10	Shifting sleeve
11	Multiplate clutch basket
12	Bolts (6 off)
13	Synchronizer sleeve
14	Planetary sun gear
15	Differential side gear (2 off)

The center differential assembly is the primary feature of the twin speed transfer case. Torque is transmitted through the center differential carrier and distributed to the differential gears and the front and rear output flanges. The planetary gear set, for the high/low range change function, is also an integral part of the center differential assembly.

The assembly comprises three differential pinion gears and shafts, which are equally spaced within the center differential carrier. The differential shafts have a rigid connection to the differential carrier. Three planetary pinion gears and shafts are located between the pinion gears. The planetary sun gear and two differential side gears are located in the centerline of the differential carrier.

The planetary ring gear is supported in both directions by the differential casing and the differential cover. The planetary ring gear is connected to a shifting sleeve, which is engaged in either high or low range.

The multiplate clutch basket, which is welded to the differential casing, supports the friction plates. The dogteeth, synchronization cup and synchronization spring supports high range engagement for the range change function.

transmissionmanuals.com

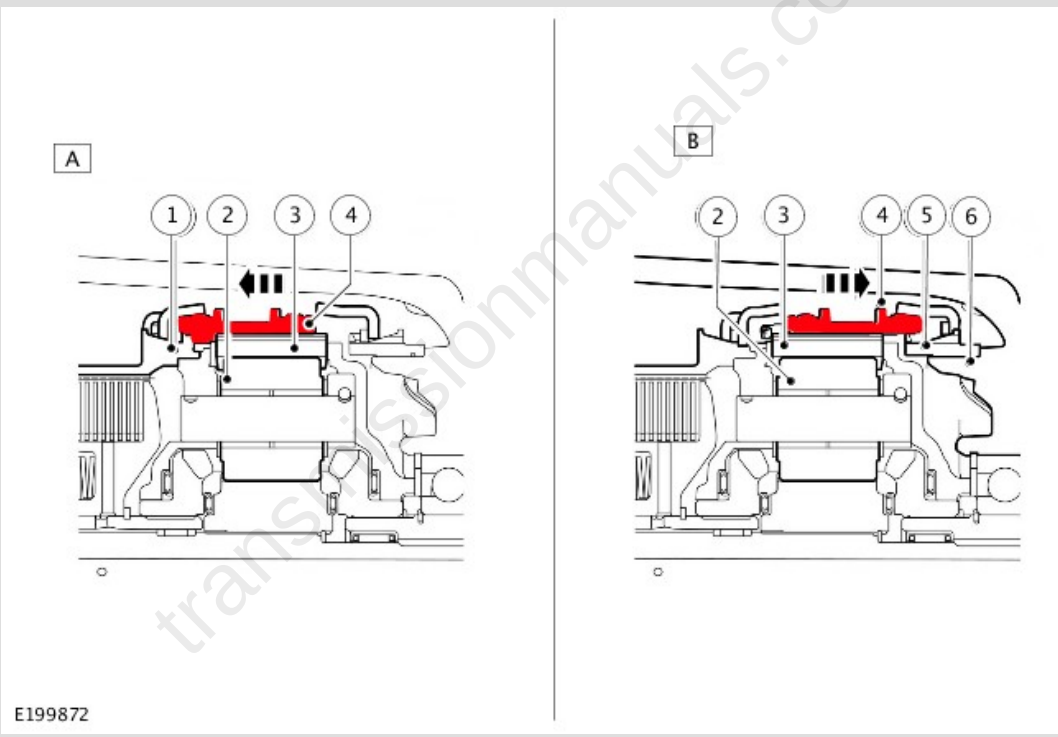

transmissionmanuals.com

ITEM	DESCRIPTION
A	High range position
B	Low range position
1	Dogteeth
2	Planetary pinion gears
3	Planetary ring gear
4	Shifting sleeve

5	Low range dogteeth
6	Rear carrier assembly

When high range is engaged, the shifting sleeve connects to the differential carrier via dogteeth. The planetary ring gear, via the shifting sleeve, and the planetary pinion gears, via the planetary shafts are also attached to the differential carrier. The planetary gear set rotates as one unit and therefore turns the differential side gear with a 1:1 ratio.

In low range, the motor moves the shifting sleeve in the direction of the low range dogteeth. The low range dogteeth is fixed to the rear carrier assembly. When the shifting sleeve is engaged with the low range dogteeth, the planetary ring gear, via the shifting sleeve, is stationary and the planetary pinion gears, via the planetary bolts, turn the differential side gears with 2.93: 1 ratio.

Multiplate Clutch Assembly

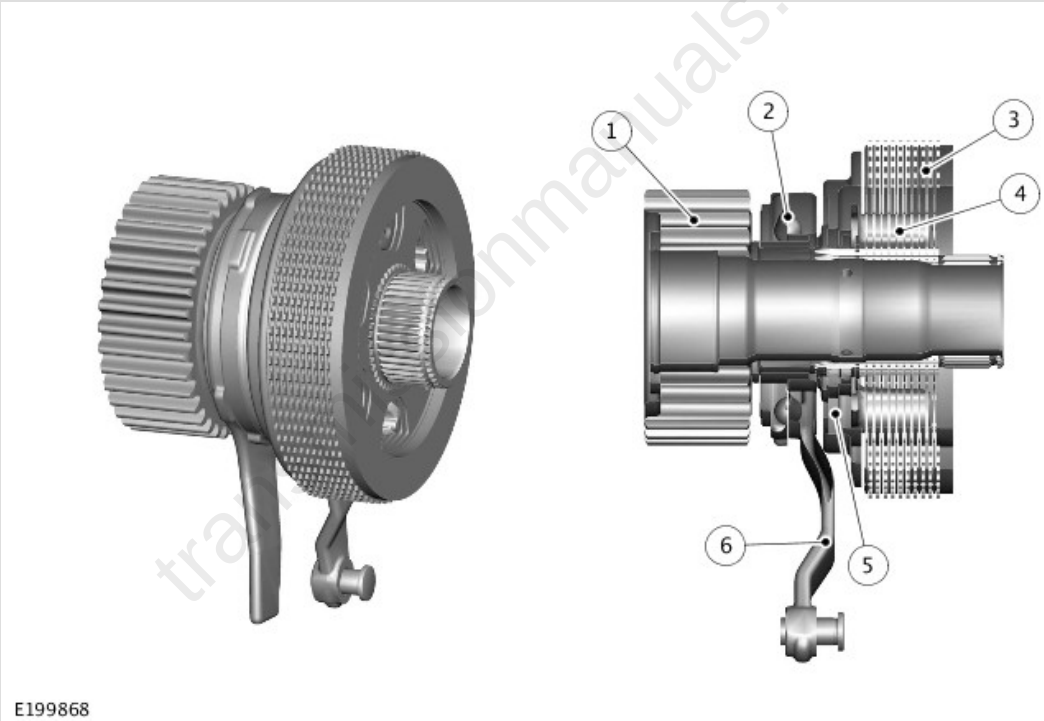

ITEM	DESCRIPTION
1	Drive chain sprocket
2	Ball ramp mechanism
3	Clutch plates
4	Cup springs
5	Clutch piston
6	Clutch lever

The aim of the multiplate clutch assembly is to prevent excessive differential slip and therefore maximize the traction performance of the vehicle. This is fundamentally different from the 'braked' traction control, which can only counteract differential slip when it occurs.

A certain amount of differential slip is required to allow the vehicle to turn corners and to remain stable under control of the Anti-lock Brake System (ABS). The Transfer Case Control Module (TCCM) monitors the drivers demands through the primary vehicle controls and automatically sets the slip torque at the differential. The system is completely automatic and does not require any special driver input.

The multiplate clutch assembly actively controls the torque flow through the center differential and optimizes the torque distribution in the driveline. The multiplate clutch assembly biases the torque from the transmission to the front differential or rear differential and wheels with the higher grip. This torque biasing prevents the wheels with the lower grip from spinning.

The multiplate clutch assembly comprises:

- A drive chain sprocket, which is connected to the front differential side gear
- Clutch levers with the ball ramp mechanism
- Clutch hub as support for the clutch plates
- Clutch piston to generate friction between the clutch plates
- Pack of cup springs to return the clutch piston into its original position.

One set of friction plates are connected to the clutch hub, the other set of friction plates are connected to the multiplate clutch basket, which is welded to the center differential housing.

transmissionmanuals.com

Multiplate Clutch Actuation

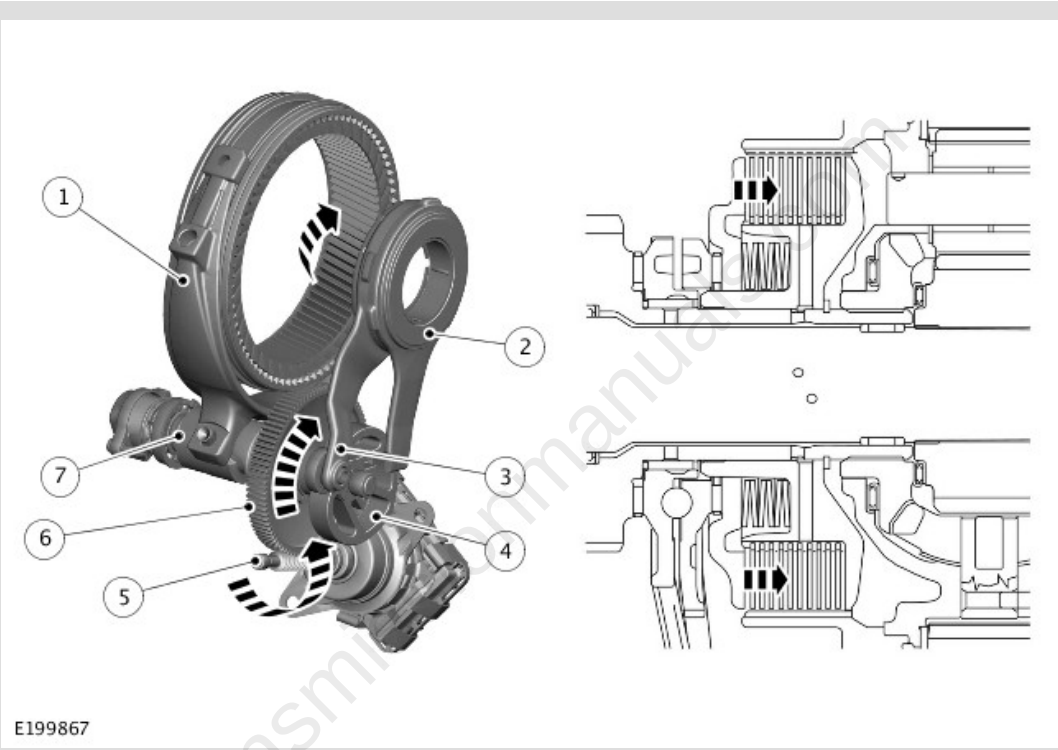

ITEM	DESCRIPTION
1	Shifting fork - High/Low range
2	Fixed lever
3	Clutch lever
4	Clutch control disc
5	Transfer case motor shaft
6	Gear
7	Actuation shaft

Transfer Case Motor Position For Clutch Control Mode

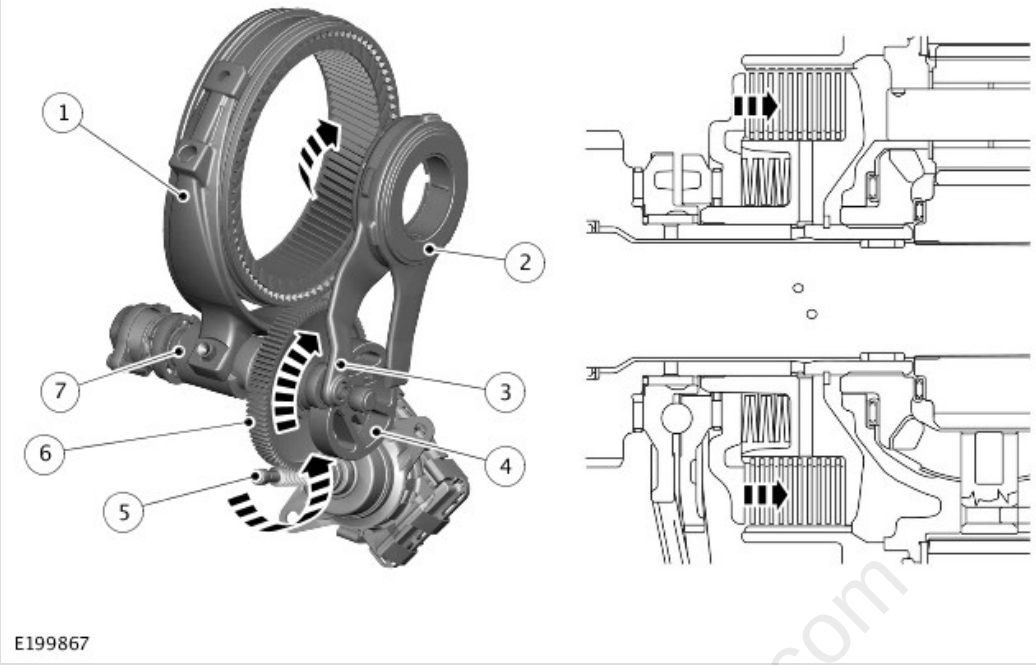

ITEM	DESCRIPTION
1	Shifting fork - High/Low range
2	Fixed lever
3	Clutch lever
4	Clutch control disc
5	Motor shaft
6	Gear
7	Actuation shaft

transmissionmanuals.com

During range change operation, when the multiplate clutch is open, the center differential cannot be locked and the torque cannot be biased. Once the range change is complete the system returns to clutch control mode.

High Range Actuation Sequence

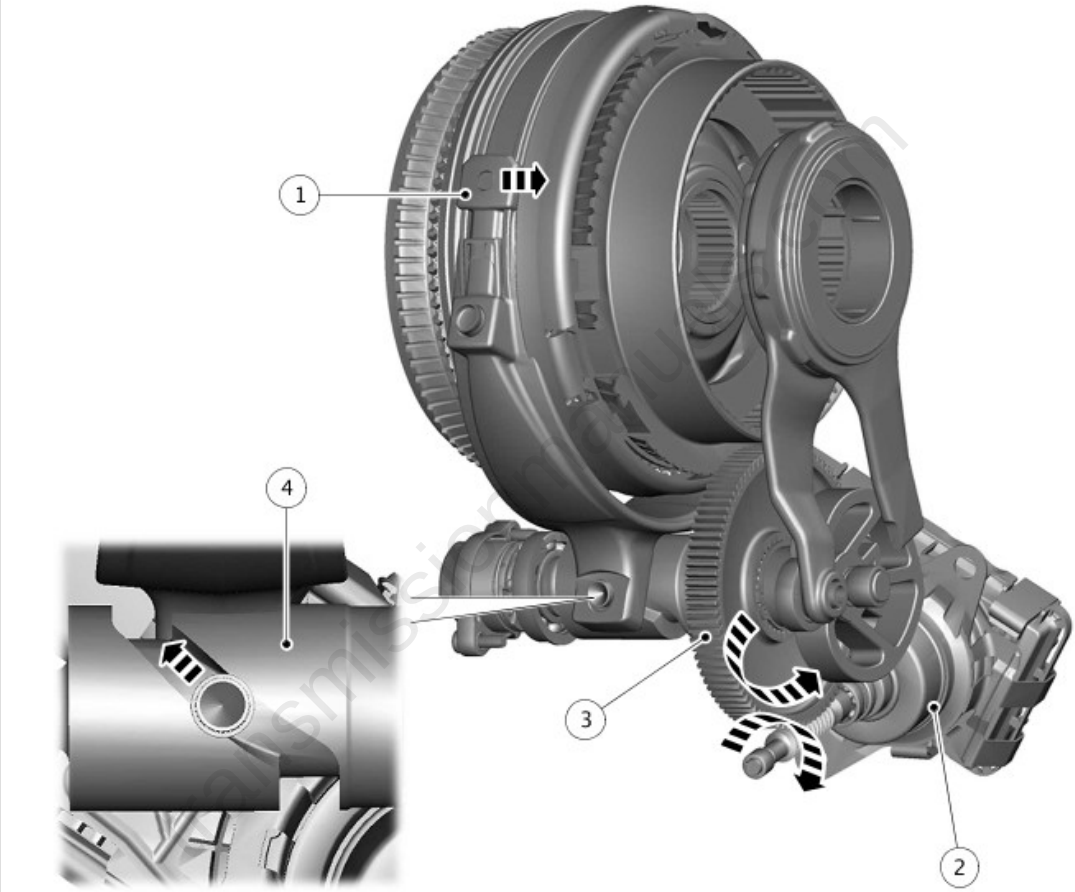

ITEM	DESCRIPTION
1	Shifting fork - High/Low range
2	Transfer Case Control Module (TCCM)
3	Gear
4	Actuation shaft

The rotational movement of the actuation shaft moves the shifting fork - High/Low range to the high range position. The shifting fork - High/Low range then moves the

shifting sleeve into the high range position. After the synchronization sequence, the planetary ring gear is connected to the high range dogteeth, via the shifting sleeve, on the differential carrier. In this position the input speed equals the output speed, which equates to a high range ratio of 1:1.

Low Range Actuation Sequence



ITEM	DESCRIPTION
1	Shifting fork - High/Low range
2	Transfer Case Control Module (TCCM)
3	Gear
4	Actuation shaft

The rotational movement of the actuation shaft moves the shifting fork - High/Low range to low range position. The shifting fork - High/Low range then moves the shifting sleeve into the low range position. The planetary ring gear is then connected to the low

range dogteeth, via the shifting sleeve, on the rear carrier assembly. The output speed is then reduced by a ratio of 2.93:1.

NOTE:

During the range change process there is no clutch lever actuation and therefore torque biasing is not available during the range change process.

Transfer Case Control Module with Integrated Actuator



Transfer Case Control Module (TCCM) comprises an integrated control module and a brushless Direct Current (DC) motor. The TCCM is fitted to the twin speed transfer case. The integrated transfer case motor is controlled by the TCCM to operate both the high/low range change and the torque-biasing device (multiplate clutch).

The TCCM detects wheel slip and other vehicle conditions via various inputs from other control modules. The TCCM controls the multiplate clutch based on these inputs to provide optimal torque distribution to the front differential and rear differential. It also receives range change requests from the range change selection switch and controls high/low gear change. The multiple clutch control and range change actuation are achieved by the integrated transfer case motor via a worm gear which drives an actuation shaft. The TCCM monitors the rotational position of the integrated transfer case motor by a Hall effect sensor fitted within TCCM.

The actuation shaft rotational movement is monitored by a high/low range position sensor fitted in the transfer case. The electrical power and ground to the high/low range position sensor is provided by TCCM. The high/low range position sensor sends a Pulse Width Modulation (PWM) signal to the TCCM via hardwired connection.

transmissionmanuals.com

The TCCM is connected to the FlexRay bus and controls transfer case operation. The TCCM receives a power supply via a relay from:

- A 40A fuse link located in the Engine Junction Box (EJB)
- The power supply relay is controlled by the relay – extended ignition which is controlled by Body Control Module/Gateway Module (BCM/GWM) assembly.

If the TCCM is replaced, the Land Rover approved diagnostic system must be connected to the vehicle and the "New Module Replacement" procedure must be completed.
For additional information, refer to: Transfer Case (308-07C, Diagnosis and Testing).

Range Status Indication

The range change selection switch has a Light Emitting Diode (LED), this LED operates in three ways:

- The Light Emitting Diode (LED) illuminates when the twin speed transfer case is in low range.
- The Light Emitting Diode (LED) is switched off when the twin speed transfer case is in high range.
- The Light Emitting Diode (LED) is flashing when range change operation is in progress.

There will also be a message displayed in the Instrument Cluster (IC) message center, which can also inform the driver of any faults with the twin speed transfer case.

The low range status warning indicator in the IC has the following logic:

- The warning indicator illuminates when the twin speed transfer case is in low range.
- The warning indicator is switched off when the twin speed transfer case is in high range.
- The warning indicator is flashing when range change is pending or range change is in progress.

The following table shows the messages that can be displayed in the message center relating to the transfer case:

MESSAGE	DESCRIPTION	CHIME
'Low range selected'	Low range is engaged after a range change request.	None
Low Range	Low range is requested while vehicle speed is less than 2km/h (1.25 mph).	None

transmissionmanuals.com

Requested: Available when stationary	Change to Low range is available when vehicle is stationary.	
Low Range Requested: Select Neutral for Range Change	Low range is requested while vehicle is stationary and Transmission Control Switch (TCS) is not in Neutral (N). Change to Low range starts when Neutral (N) is selected on the TCS.	None
'High range selected'	High range is engaged after a range change request.	None
High Range Requested: Available below 60 km/h (37mph)	High range is requested while driving in low range with vehicle speed above 60 km/h (37 mph). Range change will start when vehicle speed is lower than 60 km/h (37 mph).	None None
High Range Requested: Select Neutral for Range Change	High range is requested while vehicle speed is below 60 km/h (37 mph) and Transmission Control Switch (TCS) position is not in Neutral (N). Change to High range starts when Neutral (N) is selected on the TCS.	None
Range Change Not Available	Range change is requested but not available due to: A fault in the system The supply voltage to the Transfer Case Control Module (TCCM) is below 10.5 V The oil temperature in the transfer case is below -30°C (-22°F).	None
Traction reduced	Center differential locking torque is not available due to a fault in system or lost communications between Instrument Cluster (IC) and Transfer Case Control Module (TCCM). Rear differential locking torque is not available due to a fault in system or lost communications between the IC and Rear Differential Control Module (RDCM) (if equipped).	None
Loss of Drive	Twin speed transfer case not in gear, no drive to wheels.	Yes

transmissionmanuals.com

Transfer Case Control Module Inputs/Outputs

- Power supply via a relay controlled by Body Control Module/Gateway Module (BCM /GWM) assembly
- Primary battery ground
- High/Low range position sensor ground.

The Transfer Case Control Module (TCCM) receives the following inputs:

- High/Low range position sensor signal
- FlexRay bus messages.

The Transfer Case Control Module (TCCM) sends the following outputs:

- High/Low range position signal power supply
- FlexRay bus messages.

Range Change Selection Switch

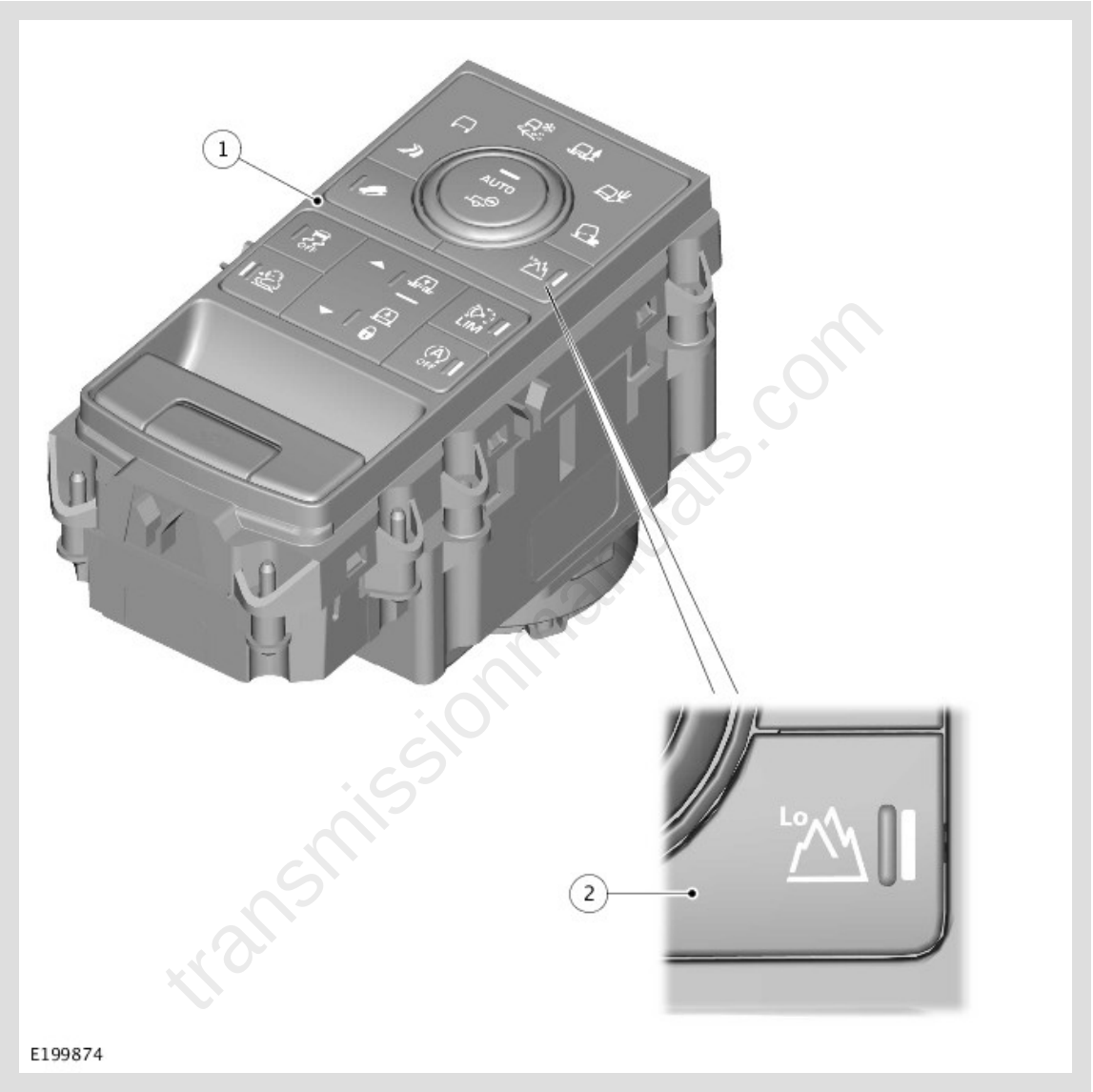

ITEM	DESCRIPTION
1	Terrain Response (TR) switchpack
2	Range change selection switch

The range change selection switch is a momentary switch and located in the Terrain Response (TR) switchpack, in the floor console.

When the range change selection switch is operated, the Terrain Response (TR) switchpack sends a message to the Body Control Module/Gateway Module (BCM/GWM)

assembly on the High Speed (HS) Controller Area Network (CAN) chassis systems bus. The BCM/GWM assembly transmits this message to the Transfer Case Control Module (TCCM) via FlexRay bus.

A single press of the range change selection switch will initiate range change if all the required conditions for range change are met. The range change request is delayed for 1 minute if the vehicle speed or the Transmission Control Switch (TCS) position are out of operating condition. When the request is delayed, a corresponding warning message is displayed in the Instrument Cluster (IC) message center.

If all the required conditions are met a single press of the range change selection switch will initiate range change in the twin speed transfer case.

The range change selection request is delayed for 1 minute, if:

- The vehicle speed for range change is above 60 km/h (37 mph)
- TCS not in the requested position.

While the request is delayed, driver can cancel the request by pressing the range change selection switch.

If the vehicle speed condition or the TCS position condition is not in the requested operating range within 1 minute, the range change request is cancelled.

Range change is available only when engine is running.

High/Low Range Change Light Emitting Diode

The high/low range change Light Emitting Diode (LED) is connected to the Terrain Response (TR) switchpack. Transfer Case Control Module (TCCM) sends the range change status by a FlexRay bus to the Body Control Module/Gateway Module (BCM /GWM) assembly. The BCM/GWM assembly transmits this signal through a High Speed (HS) Controller Area Network (CAN) chassis systems bus connection to the Terrain Response (TR). TR illuminates the high/low range change LED depending on the range change status from TCCM.

When the transfer case is in high range, the switch LED is not illuminated.

While range change is in progress, the LED will flash on until the new range status has been achieved.

High/Low Range Position Sensor

transmissionmanuals.com



The high/low range position sensor detects the rotational angle of the actuation shaft. The actuation shaft angle position is correlated to the high/low fork shift position and the clutch torque control position. The high/low range position sensor output controls the actuation shaft position with a Pulse Width Modulation (PWM) signal to the Transfer Case Control Module (TCCM). The high/low range position sensor output controls the actuation shaft whether the transfer case is in high or low range, or during range change. The high/low range position sensor output also controls the clutch torque control position while the system is in high or low range.

The TCCM check the actuation shaft position when TCCM wakes up and engine starts. The high/low range position sensor is connected to the TCCM via a 3-pin connector.

transmissionmanuals.com

OPERATION

High Range Operation

In high range, the torque output from the automatic transmission is passed to the transfer case input shaft. The position of the shifting sleeve couples the input shaft directly to the transfer case housing. The differential splits the torque between the two side gears. One side gear is connected by splines and passes the torque to the rear output flange. The second side gear is connected to the chain drive sprocket and passes the torque, via the drive chain, to the front output flange.

Low Range Operation

In low range, the torque output from the automatic transmission is passed to the transfer case input shaft. The shifting sleeve is moved rearwards and connects the planetary ring gear to the transfer case housing. The torque from the automatic transmission is now directed through the sun gear of the epicyclic gearset and, via the pinion gears and pinion gear shafts, into the planetary carrier. The annulus gear of the epicyclic gearset is secured inside the casing and generates the low range ratio of 2.93: 1. The torque is then passed, via the shifting sleeve, to the differential housing where it is split between the two side gears. One side gear is connected by splines and passes the torque to the rear output flange. The second side gear is connected to the chain drive sprocket and passes the torque, via the drive chain, to the front output flange. The vehicle will remain in the selected range unless the driver requests a change, for example it will not automatically revert to high range following an ignition off/on sequence.

Range Change Procedure

> **NOTE:**
>
> Changing from High range to Low range can be performed only when the vehicle is stationary.

Range change can be requested at any time while the engine is running. If the conditions are not met for range change, the Instrument Cluster (IC) will display the appropriate message in the message center. The message guides the driver to complete the range change and the low range warning indicator will flash. Once Neutral (N) is selected in the Transmission Control Switch (TCS), the TCS will be locked until the range change is completed.

The range change process can take several seconds to complete after a request is accepted. The actual time is dependent on a number of factors including:

- Transfer case temperature is out of range
- Component wear
- If the first attempt was unsuccessful.

Default/Limp-home Strategy

If a fault occurs with the transfer case, the Transfer Case Control Module (TCCM) or one of the required input signals (for example vehicle speed signal), the TCCM records a Diagnostic Trouble Code (DTC). The TCCM will respond appropriately to provide the highest level of system capability under the specific fault conditions. The following fault states are possible:

transmissionmanuals.com

Fault state	System response	Driver warning
Clutch control not available due to an over temperature	A driver warning message is displayed. The tractive capability or off-road capability of the vehicle is reduced temporarily.	Warning indicator and/or 'Traction Reduced' message in message center
Clutch control not available due to a permanent fault	A driver warning message is displayed. The tractive capability or off-road capability of the vehicle is reduced.	Warning indicator and/or 'Traction Reduced' message in message center
Transfer case is in Neutral	If engine starts while the transfer case is in Neutral (N) and the automatic transmission is not in Neutral (N). The Transfer Case Control Module (TCCM) sets a warning message and attempt to engage High range when Neutral (N) is selected on the Transmission Control Switch (TCS).	Flash low range indicator and 'High Range Requested: Select Neutral (N) for Range Change' message
Transfer case stuck in Neutral	As the transfer case is stuck between high and low range resulting in no drive to wheels, the Electric Park Brake (EPB) will automatically apply when Park position in the Transmission Control Switch (TCS) is selected or engine is turned off.	Flash low range indicator plus 'Loss of Drive' message
Range change not available	A driver warning message is displayed and range change is not performed. Range change is not available due to:	'Range Change not Available' on instrument pack if a range change is requested
	A fault in system	
	The supply voltage to Transfer Case Control Module (TCCM) is below 10.5 V	
	The oil temperature in the transfer case is below -30°C (-22° F).	
No functional degradation	A signal fault or Diagnostic Trouble Code (DTC) may be logged but no customer symptom if a back-up signal is available and used.	None

transmissionmanuals.com

If a component in the twin speed transfer case or the Transfer Case Control Module (TCCM) is overheated, the TCCM set a Diagnostic Trouble Code (DTC). The TCCM opens the clutch and 'Traction reduced' warning message is displayed. When the component is cooled down sufficiently, the clutch control is re-activated and the message will not displayed.

When a range change is completed in ambient temperature below 0°C (32°F), TCCM inhibits the next range change for 1 minute. This is to protect the TCCM and is design intent. 'Range change not available' message will be displayed if a range change is requested within this 1 minute without DTC.

TCCM has a recovery strategy from failures of transfer case neutral. When engine starts or it attempts to re-engage high range first and subsequently low range if high range engagement is still not achieved. A 'Select Neutral for Range change' message is displayed:

- If the twin speed transfer case is in Neutral (N) and TCCM is in recovery mode
- Transmission Control Switch (TCS) is not in Neutral (N) position which is required for range change.

If range change is requested and the requested range is not achieved, TCCM attempts to re-engage the previous range. If a requested range not achieved insists while vehicle is stationary, another range change request is recommended after vehicle moves a short distance or switch ignition off for the minimum 1 minute and start the engine.

TCS is locked in neutral position while TCCM is performing range change. This is a normal function and this also applies to a range change during the recovery mode.

CONTROL DIAGRAM

CONTROL DIAGRAM - TRANSFER CASE CONTROL MODULE

transmissionmanuals.com

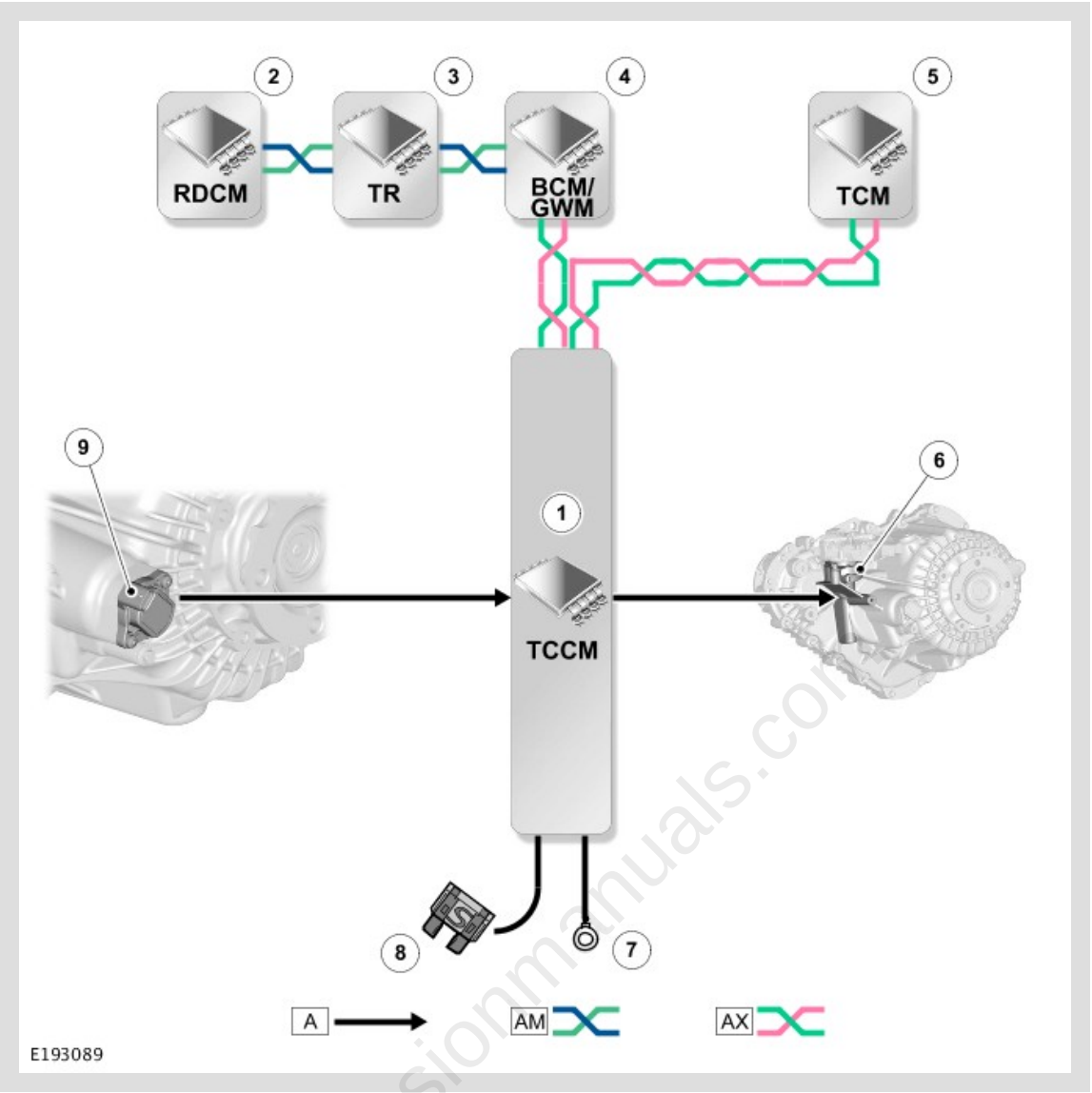

A = HARDWIRED: AM = HIGH SPEED (HS) CONTROLLER AREA NETWORK (CAN) CHASSIS SYSTEMS BUS: AX = FLEXRAY BUS.

ITEM	DESCRIPTION
1	Transfer Case Control Module (TCCM)
2	Rear Differential Control Module (RDCM) - If Equipped
3	Terrain Response (TR) switchpack - High/Low range selection switch
4	Body Control Module/Gateway Module (BCM/GWM) assembly
5	Transmission Control Module (TCM)
6	Transfer case actuator
7	Ground
8	Power supply
9	High/Low range position sensor

transmissionmanuals.com

transmissionmanuals.com

PUBLISHED: 12-JUL-2017
2022.0 DEFENDER (LE), 308-07

TRANSFER CASE - [+] TWIN SPEED TRANSFER CASE

DIAGNOSIS AND TESTING

PRINCIPLES OF OPERATION

For a detailed description of the Transfer Case, refer to the relevant Description and Operation section in the workshop manual. REFER to: Transfer Case (308-07 Transfer Case - [+] Twin Speed Transfer Case, Description and Operation).

INSPECTION AND VERIFICATION

CAUTION:

Diagnosis by substitution from a donor vehicle is **NOT** acceptable. Substitution of control modules does not guarantee confirmation of a fault, and may also cause additional faults in the vehicle being tested and/or the donor vehicle.

NOTE:

If a control module or a component is suspect and the vehicle remains under manufacturer warranty, refer to the Warranty Policy and Procedures manual, or determine if any prior approval programme is in operation, prior to the installation of a new module/component.

1. Verify the customer concern

1. Visually inspect for obvious signs of damage and system integrity

Visual Inspection

transmissionmanuals.com

MECHANICAL	ELECTRICAL
▪ Transfer case ▪ Driveshafts ▪ Differentials ▪ Halfshafts ▪ Fluid leaks	▪ Fuses ▪ Wiring harnesses and connectors ▪ Transfer case control module ▪ Instrument cluster ▪ High/low range switch

1. If an obvious cause for an observed or reported concern is found, correct the cause (if possible) before proceeding to the next step

1. If the cause is not visually evident, verify the symptom and refer to the Symptom Chart, alternatively check for Diagnostic Trouble Codes (DTCs) and refer to the DTC Index

1. Check DDW for open campaigns. Refer to the corresponding bulletins and SSMs which may be valid for the specific customer complaint and carry out the recommendations as required

SYMPTOM CHART

SYMPTOM	MESSAGE	POSSIBLE CAUSES	ACTION
Traction Reduced message displayed via the instrument cluster	Traction Reduced	▪ TCCM integrated actuator internal /mechanical failure /overtemperature ▪ Rear Differential Control Module (RDCM) fault ▪ ABS fault ▪ CAN fault ▪ Harness or power supply fault	▪ Using Jaguar Land Rover approved diagnostic equipment, read the DTCs and refer to the relevant DTC index. Complete the appropriate Guided Flow as specified via the Pathfinder tool ▪ Using Jaguar Land Rover approved diagnostic equipment, check the snapshot data to determine the missing message source control module on the FlexRay network. Check the relevant control module for related DTCs and refer to the relevant DTC index
Loss Of Drive message displayed via the instrument cluster	Loss Of Drive	▪ TCCM integrated actuator internal /mechanical failure /overtemperature ▪ Harness or power supply fault	▪ Using Jaguar Land Rover approved diagnostic equipment, read the DTCs and refer to the relevant DTC index. Complete the appropriate Guided Flow as specified via the Pathfinder tool
A range change is not initiated when	Range Change Not Available	▪ TCCM internal /mechanical failure /overtemperature	▪ Using Jaguar Land Rover approved diagnostic equipment, read the DTCs and refer to the relevant DTC index. Complete the appropriate Guided Flow as specified via the Pathfinder tool

transmissionmanuals.com

the high/low range switch is pressed		▪ Rear Differential Control Module (RDCM) fault ▪ Transmission Control Module (TCM) fault ▪ Harness or power supply fault	
		▪ Power supply voltage to TCM is less than 11v	▪ Using Jaguar Land Rover approved diagnostic equipment, check datalogger signals - Main ECU Voltage Supply (0xDD02) and Control Module Voltage (0xF442). If the power supply to the module is below 11 v, refer to the relevant section of the workshop manual and test the battery and charging system
		▪ Range change requested while the transmission oil temperature is lower than -30°C	▪ Using Jaguar Land Rover approved diagnostic equipment, check datalogger signal - Transmission Temperature (0xFE00). Range change is available when the recorded transmission oil temperature is above -30°C (Note: only one range change request per minute is available while the transmission oil temperature is between -30°C and 0°C. These restrictions do not apply once the transmission oil temperature is above 0°C)
		▪ A second range change has been requested before the 60 second timer has expired following an initial range request made while the transmission oil temperature is between -30°C and 0°C	▪ Using Jaguar Land Rover approved diagnostic equipment, check datalogger signal - Transmission Temperature (0xFE00). Retry range change request when the recorded transmission oil temperature is above 0°C
A range change is not initiated	Low Range Requested: Available When Stationary	▪ Range change requested when conditions for change to low range are not satisfied	▪ The vehicle must be stationary for low range change to be successfully initiated
A range change is not initiated	High Range Requested: Available	▪ Range change requested when conditions for change to high range are not satisfied	▪ Vehicle speed must be lower than 37mph/60kph for high range change to be successfully initiated

transmissionmanuals.com

	Below 37mph /60kph		
A range change is not initiated	Low Range Requested: Select Neutral For Range Change	▪ Range change requested when conditions for range change are not satisfied	▪ The transmission must be in neutral for the range change to be successfully initiated
	High Range Requested: Select Neutral For Range Change		
A range change is not initiated	-	▪ Range change request signal not received by the TCCM	▪ Using Jaguar Land Rover approved diagnostic equipment, check the Terrain Response Switchpack for related DTCs and refer to the relevant DTC index
Judder (see definition below) during low speed manoeuvring with high steering inputs (front and rear driveshafts rotating at different speeds)	-	**NOTE:** At full lock, there will be some tyre scrubbing; as the temperature drops, scrubbing may be experienced as stick/slip judder. This is normal and does not require any service intervention ▪ Transfer case clutch not disengaged fully	▪ Refer to the relevant section of the workshop manual and check the transfer case fluid level/condition. Using JLR approved diagnostic equipment, perform routine - Transfer Case Oil Replacement (see details below)
Oil leaks from transfer case	-	▪ Blocked or restricted breather pipe ▪ Physical damage to shaft seal flange /slinger components	▪ Check the oil breather pipe for damage or restrictions and rectify as required ▪ Check for evidence of oil leaks from the front/rear shaft seals and replace oil seals as required

transmissionmanuals.com

DEFINITION OF JUDDER

When diagnosing faults involving vehicle judder, see guidance below for a working definition of the characteristics of the condition:

- Judder is an event which occurs while carrying out low speed tight turn manoeuvres (car park type driving) and transmits through the vehicle chassis in the frequency range of 30Hz to 50Hz
- The judder frequency is dull and audible and is possible to sense through the steering wheel
- The judder event is a continuous dull vibration / judder which will occur for a number of seconds. It is not a single occurrence
- Judder will NOT occur while driving in a straight line
- Judder is associated with low speed tight turn driving at low to medium throttle (junction pull-aways and car park manoeuvres) and may feel like there is something sticking in the system
- At full lock, some tyre scrubbing may be experienced. As the temperature drops, such scrubbing may be experienced as stick/slip judder. This is normal and does not require any service intervention

transmissionmanuals.com

TCCM DTC ERROR COUNT PINPOINT TESTS

In order to determine whether certain Transfer Case Control Module (TCCM) DTCs have been logged with sufficient frequency to require the replacement of the TCCM, follow the pinpoint test diagnostics outlined below:

PINPOINT TEST A : DTC SNAPSHOT - EXTENDED DATA CHECKS	
TEST CONDITIONS	**DETAILS/RESULTS/ACTIONS**
A1: CHECK AND RECORD DTC SNAPSHOT VALUES	
	1 Note the DTC Snapshot data value of DTC Extended Data value - Total Operation Cycles with testfailed Status
	2 Note the DTC Snapshot data value of DTC Extended Data value - Total Operation Cycles since First testfailed Status
	Are **both** these values 3 or greater? **Yes** GO to A2 . **No** The DTC should be considered as **intermittent** . Refer to the appropriate Intermittent DTC ACTION in the table below
A2: COMPARISONS OF DTC DTC SNAPSHOT VALUES WHEN BOTH VALUES ARE 3 OR GREATER	
	1 Compare the values of DTC Extended Data value - Total Operation Cycles with testfailed Status and DTC Extended Data value - Total Operation Cycles since First testfailed Status

	Are the two values either the same, or only differing within a count of one? **Yes** The DTC should be considered as **permanent** . Refer to the appropriate Permanent DTC ACTION in the table below **No** The DTC should be considered as **intermittent** . Refer to the appropriate Intermittent DTC ACTION in the table below

TRANSFER CASE CONTROL MODULE DTC ACTION TABLE

DTC	PERMANENT DTC ACTION	INTERMITTENT DTC ACTION
▪ P0605-43 ▪ P062F-43 ▪ P062F-68 ▪ P0666-11 ▪ P0666-12 ▪ P0666-29 ▪ P0666-64 ▪ P160C-45 ▪ P160C-48 ▪ P160C-94 ▪ U200C-9A	▪ Install a new transfer case control module and configure as a new module. Refer to the Transfer Case Control Module Replacement Application instructions in this section	▪ Using Jaguar Land Rover approved diagnostic equipment, perform the Transfer Case Healthcheck Application. The application will subsequently test the system and report a DTC if a fault persists ▪ If fault persists, install a new transfer case control module and configure as a new module. Refer to the Transfer Case Control Module Replacement Application instructions in this section
▪ P18A4-13 ▪ P18A4-16 ▪ P18A4-17	▪ Refer to the electrical circuit diagrams and check the hi/low range position sensor power circuit for circuit faults. Repair circuit as required, clear DTC and retest ▪ If the fault persists, install and configure a new high/low range position sensor. Refer to the High/Low Range Position Sensor Replacement Application instructions in this section ▪ Clear DTC, start the engine and retest ▪ If fault persists, install a new transfer case control module and configure as a new module. Refer to the Transfer Case Control Module Replacement Application instructions in this section	▪ Clear DTC, start the engine and retest

transmissionmanuals.com

▪ P18A5-03 ▪ P18A5-11 ▪ P18A5-12 ▪ P18A5-13 ▪ P18A5-37	▪ Refer to the electrical circuit diagrams and check the hi/low range position sensor signal circuit for circuit faults. Repair circuit as required, clear DTC and retest ▪ If the fault persists, install and configure a new high/low range position sensor. Refer to the High/Low Range Position Sensor Replacement Application instructions in this section ▪ Clear DTC, start the engine and retest ▪ If fault persists, install a new transfer case control module and configure as a new module. Refer to the Transfer Case Control Module Replacement Application instructions in this section	▪ Clear DTC, start the engine and retest
▪ U0080-88	▪ Refer to the electrical circuit diagrams and check the FlexRay bus circuit for short circuit to ground, short circuit to power, open circuit, high resistance. Repair circuit as required ▪ Clear DTC, start the engine and retest ▪ If fault persists, install a new transfer case control module and configure as a new module. Refer to the Transfer Case Control Module Replacement Application instructions in this section	▪ Using Jaguar Land Rover approved diagnostic equipment, perform the Transfer Case Healthcheck Application. The application will subsequently test the system and report a DTC if a fault persists ▪ If fault persists, install a new transfer case control module and configure as a new module. Refer to the Transfer Case Control Module Replacement Application instructions in this section
▪ U1000-02 ▪ U1000-11 ▪ U1000-12 ▪ U1000-16 ▪ U1000-17 ▪ U1000-1C ▪ U1000-49 ▪ U1000-56 ▪ U1000-62 ▪ U1A4B-16 ▪ U1A4B-17 ▪ U1A4B-1C	▪ Install a new transfer case control module and configure as a new module. Refer to the Transfer Case Control Module Replacement Application instructions in this section	▪ Using Jaguar Land Rover approved diagnostic equipment, perform the Transfer Case Healthcheck Application. The application will subsequently test the system and report a DTC if a fault persists ▪ If fault persists, install a new transfer case control module and configure as a new module. Refer to the Transfer Case Control Module Replacement Application instructions in this section

transmissionmanuals.com

	▪ U1A4B-47 ▪ U1A4B-48 ▪ U1A4B-49 ▪ U1A4B-55 ▪ U1A4B-56 ▪ U1A4B-64 ▪ U1A4B-84 ▪ U200C-4B ▪ U200C-64 ▪ U2011-18 ▪ U2011-19 ▪ U2011-1D ▪ U2011-28 ▪ U2011-41 ▪ U2011-56 ▪ U2011-62 ▪ U2011-68 ▪ U2011-77 ▪ U2011-78 ▪ U2011-85 ▪ U2011-86 ▪ U2011-9A ▪ U2016-04 ▪ U2016-06 ▪ U2016-47			

transmissionmanuals.com

▪ U2016-49 ▪ U2016-92 ▪ U3000-1C ▪ U3000-42 ▪ U3000-4A ▪ U3012-04 ▪ U3012-1C ▪ U3012-48 ▪ U3012-92 ▪ U3012-94 ▪ U3012-96		
▪ U3006-13	▪ Refer to the electrical circuit diagrams and check the transfer case control module power and ground circuits for open circuit, high resistance. Repair circuit as required, clear DTC and retest ▪ Using Jaguar Land Rover approved diagnostic equipment, check for related low voltage DTCs and refer to the relevant DTC index ▪ Using Jaguar Land Rover approved diagnostic equipment, perform the Transfer Case Healthcheck Application. The application will subsequently test the system and report a DTC if a fault persists	▪ Using Jaguar Land Rover approved diagnostic equipment, perform the Transfer Case Healthcheck Application. The application will subsequently test the system and report a DTC if a fault persists ▪ If fault persists, install a new transfer case control module and configure as a new module. Refer to the Transfer Case Control Module Replacement Application instructions in this section

transmissionmanuals.com

TRANSFER CASE CLASSIFICATION AND CLASSIFICATION VERSION NUMBER LOCATION

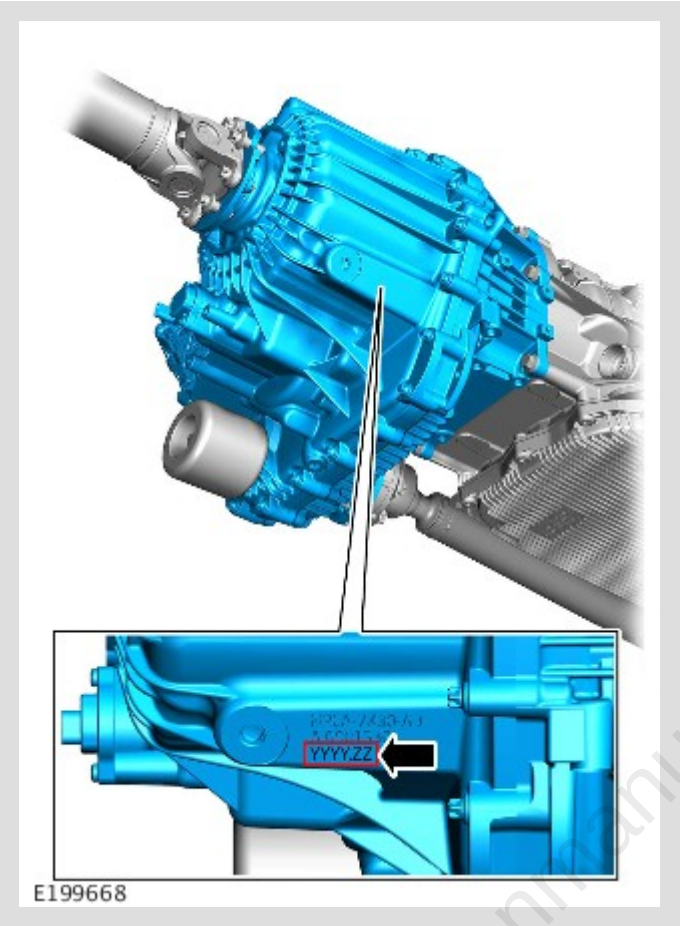

Note the six digit code stamped on the transfer case (illustrated as YYYY.ZZ). The first four digits (YYYY) represent the classification number (in decimal), the final two digits (ZZ) represent the classification version (in decimal)

TRANSFER CASE SERVICE ROUTINES

There are a range of diagnostic and service procedures available for the transfer case and its constituent components (transfer case clutch, range selection mechanism, transfer case control module). A number of these procedures are exclusively utilised by the Pathfinder Tool Guided Diagnostic Flows, while others are available as standalone applications. Details of the transfer case/transfer case control module service routines and procedures are listed below:

STANDALONE APPLICATIONS (ECU SET-UP APPLICATIONS)

The following procedures may be accessed and run individually by the service technician and should be used to facilitate replacement of the transfer case, transfer case components or transfer case oil changes:

transmissionmanuals.com

HIGH/LOW RANGE POSITION SENSOR REPLACEMENT APPLICATION (ROTARY POSITION SENSOR REPLACEMENT APP)

When a new high/low range position sensor is installed, this procedure must be performed using JLR approved diagnostic equipment to ensure the appropriate set-up and calibration procedures and to check the installation.

TRANSFER CASE REPLACEMENT APPLICATION

NOTE:

The Transfer Case will be delivered with a transfer case control module already fitted and calibrated. Thus, there is no calibration work necessary

When a new transfer case is installed, this procedure must be performed using JLR approved diagnostic equipment to ensure the appropriate set-up and calibration procedures and to check the installation.

TRANSFER CASE OIL REPLACEMENT

Use this procedure whenever the transfer case oil requires replacement. This procedure must be performed using JLR approved diagnostic equipment.

TRANSFER CASE HEALTHCHECK APPLICATION

To perform a test of transfer case clutch and range change functionality, for example, to validate a transfer case repair, this procedure must be performed using JLR approved diagnostic equipment.

STANDALONE APPLICATIONS (MODULE SET UP REQUIREMENTS)

The following procedures may be accessed and run individually by the service technician and should be used to facilitate replacement or reprogramming of the transfer case control module:

TRANSFER CASE CONTROL MODULE REPLACEMENT APPLICATION

CAUTION:

transmissionmanuals.com

Warning: Driving the vehicle before the whole process is completed might cause damage in the transfer case

When a new transfer case control module is installed, this procedure must be performed using JLR approved diagnostic equipment to ensure the appropriate set-up and calibration procedures and to check the installation.

EXISTING MODULE PROGRAMMING APPLICATION

To reconfigure the transfer case control module with the latest level software, this procedure must be performed using JLR approved diagnostic equipment.

DTC INDEX

For a list of Diagnostic Trouble Codes (DTCs) that could be logged on this vehicle, please refer to Section 100-00. REFER to: Diagnostic Trouble Code Index - DTC: Transfer Case Control Module (TCCM) (100-00 General Information, Description and Operation).

transmissionmanuals.com

PUBLISHED: 21-NOV-2016
2022.0 DEFENDER (LE), 308-07

TRANSFER CASE - [+] TWIN SPEED TRANSFER CASE

SPECIFICATIONS

Sealers and Lubricants

ITEM	SPECIFICATION
* Recommended oil	Shell TF 0753
Capacity - Wet and dry fill	1.5 litres, (2.6 pints) (1.5 US quarts)
Input shaft splines grease	Weicon TL7391
Transfer case sealant	TL 7990 Hylomar black 102 or equivalent

CAUTION:

* Do not use any lubricant other than that specified

ITEM	SPECIFICATION
Model	DD295
Type	Two speed, permanent four wheel drive transfer box having synchronised low to high ratio shift on the move facility with an actively controlled wet clutch and 50/50 torque split across the centre differential
Clutch type	Wet, multi-plate
Maximum torque capacity	2500 Nm (1842.5 lb-ft)
Ratios:	
High	1:1
Low	2.93:1
Maximum	

transmissionmanuals.com

shift speeds:	
High to low ratio	0 kph (0 mph)
Low to high ratio	60 kph (37.2 mph)

Torque Specifications

DESCRIPTION	NM	LB-FT
Transfer case fluid drain plug	28	21
Transfer case fluid filler/level plug	28	21
Transmission support insulator to transfer case bolts	60	44
Transfer case to transmission bolts	45	33
Wiring bracket bolts	25	18
Earth strap bolt	25	18
+ Transfer case shift motor bolts	35	26
+ Transfer case clutch control solenoid bolts	5	4
+ Transfer case high / low range position sensor bolts	5	4
*** Front driveshaft to transfer case output flange:**		
Stage 1	45	33
Stage 2	Further 90°	Further 90°

*** New 'patched' Torx bolts must be installed.**

+ New bolts must be used when a new component is installed.

transmissionmanuals.com

PUBLISHED: 23-JUN-2017
2022.0 DEFENDER (LE), 308-07

TRANSFER CASE - [+] SINGLE SPEED TRANSFER CASE

TRANSFER CASE - TDV6 3.0L DIESEL

(G1972533)

INSTALLATION

41.20.25	TRANSFER GEARBOX - RENEW	3000 CC, TDV6, SINGLE SPEED TRANSFER CASE, WITH PARTICULATE FILTER, WITH DIESEL EXHAUST FLUID	4.5	USED WITHINS	
41.20.25	TRANSFER GEARBOX - RENEW	3000 CC, TDV6, SINGLE SPEED TRANSFER CASE, WITH PARTICULATE FILTER, WITHOUT DIESEL EXHAUST FLUID	3.7	USED WITHINS	
41.20.25	TRANSFER GEARBOX - RENEW	3000 CC, TDV6, TWIN SPEED TRANSFER CASE, WITH PARTICULATE FILTER,	4.4	USED WITHINS	

transmissionmanuals.com

		WITH DIESEL EXHAUST FLUID			
41.20.25	TRANSFER GEARBOX - RENEW	3000 CC, TDV6, TWIN SPEED TRANSFER CASE, WITH PARTICULATE FILTER, WITHOUT DIESEL EXHAUST FLUID	3.7	USED WITHINS	

INSTALLATION

SPECIAL TOOL(S)



303-1069

Adapter, Wrench



307-520

Installer, Output Shaft Seal

transmissionmanuals.com



JLR-308-930

Installer, Oil Seal

GENERAL EQUIPMENT

EQUIPMENT NAME
Transmission jack

PART(S)

STEP	PART NAME	QUANTITY
Step 2	Transfer case input shaft oil seal	1
Step 9	Driveshaft to front output flange bolts	6

NOTE:

Some variation in the illustrations may occur, but the essential information is always correct.

transmissionmanuals.com

1.

NOTE:

This step is only required if previously removed.

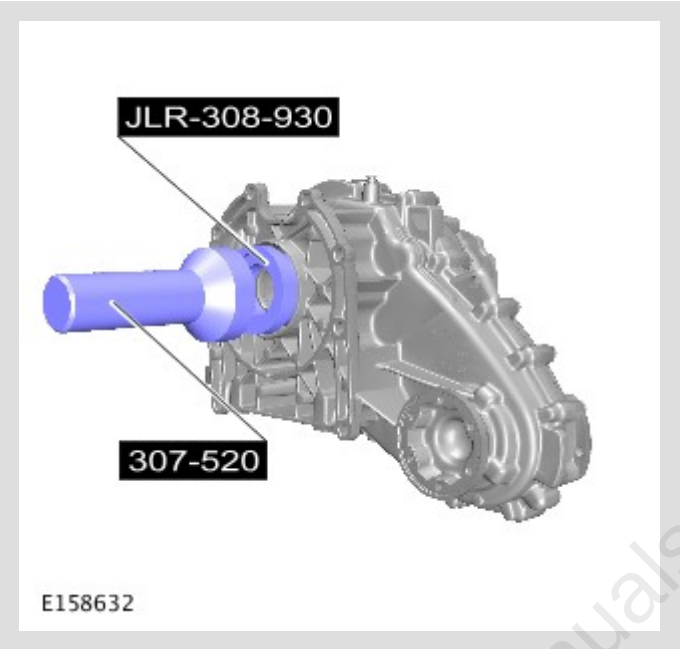

Special Tool(s): JLR-308-930 , 307-520

transmissionmanuals.com

2.

NOTE:

This step is only required if previously removed.

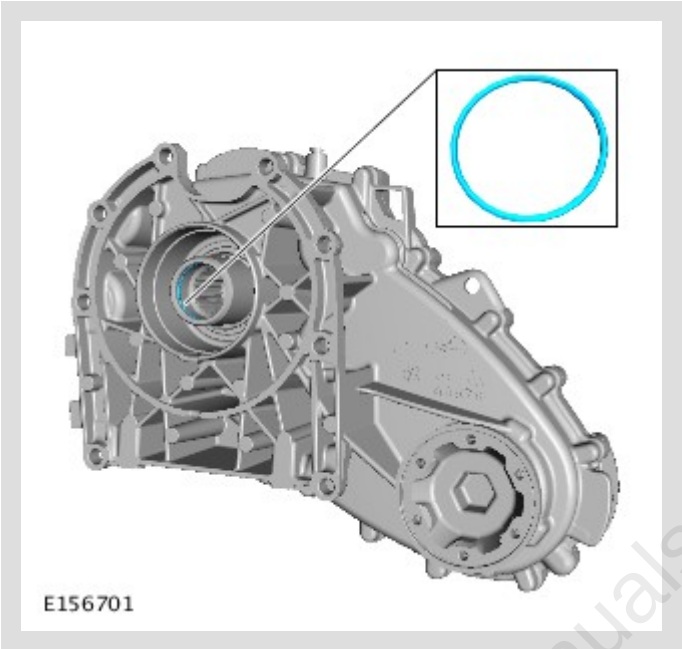

Install a new O-ring seal.

Renew Part: Transfer case input shaft oil seal Quantity: 1 .

transmissionmanuals.com

3.

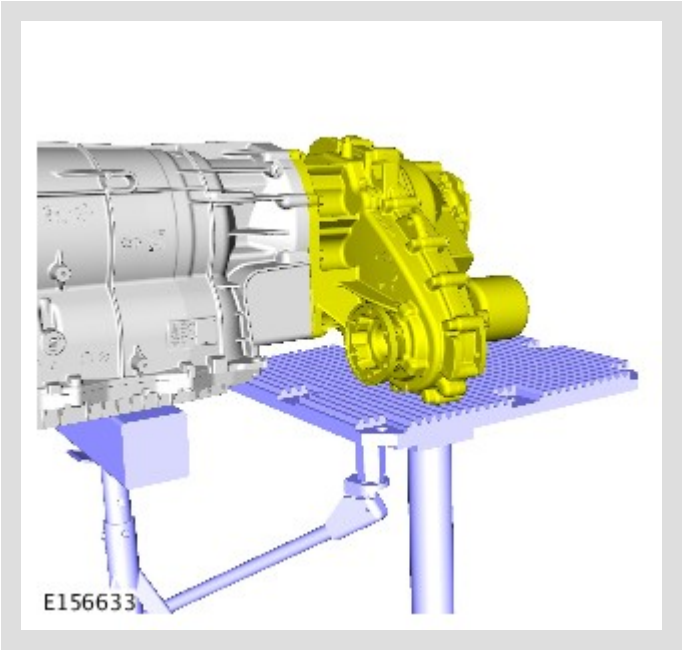

WARNING:

Secure the component to the transmission jack.

Clean the component mating faces.

- Lubricate input shaft splines with 'Weicon TL7391' grease.
  General Equipment: Transmission jack

4.

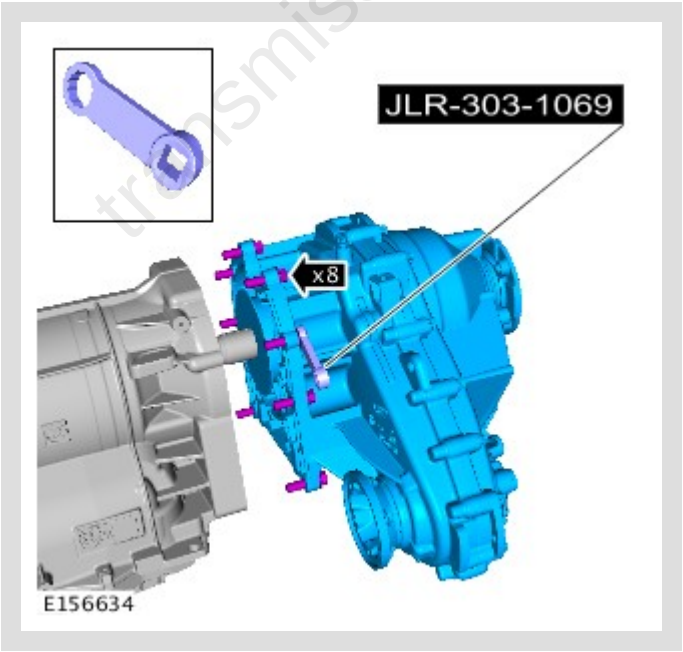

Special Tool(s): 303-1069

Torque: **45 Nm**

transmissionmanuals.com

5.

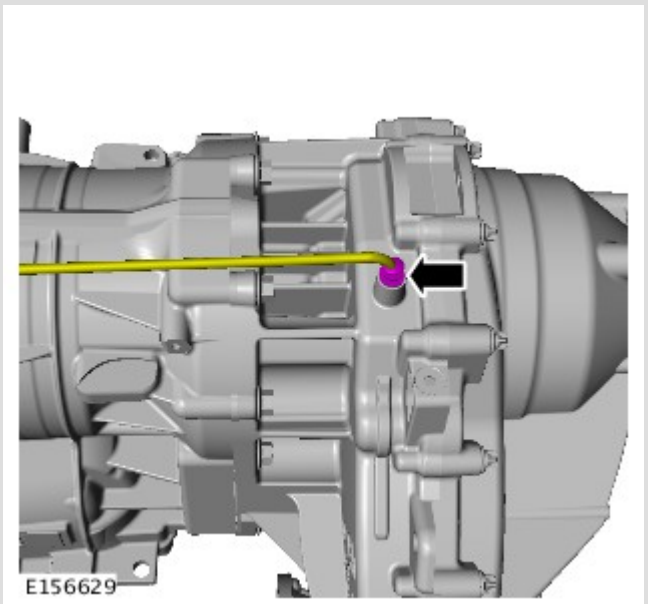

To prevent water ingress and subsequent transmission damage, make sure that the breather is fully pushed onto the transmission casing.

6.

NOTE:

If equipped.

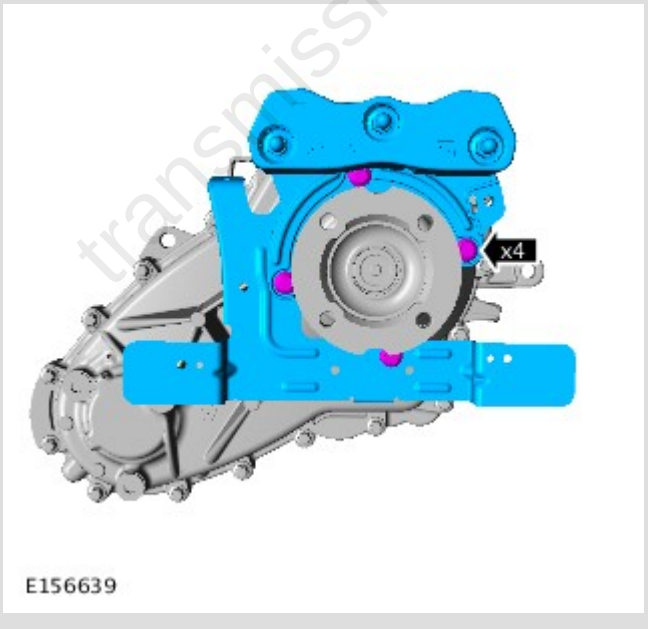

Torque: **25 Nm**

transmissionmanuals.com

7.

NOTE:

If equipped.

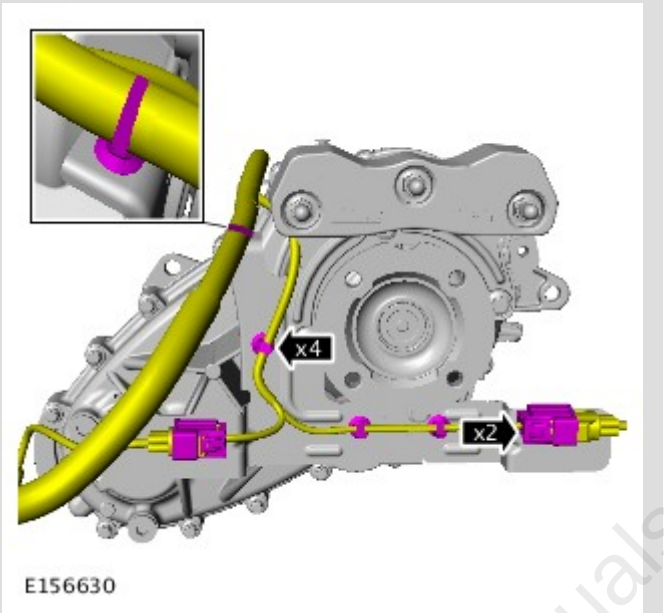

Secure the wiring harness.

8.

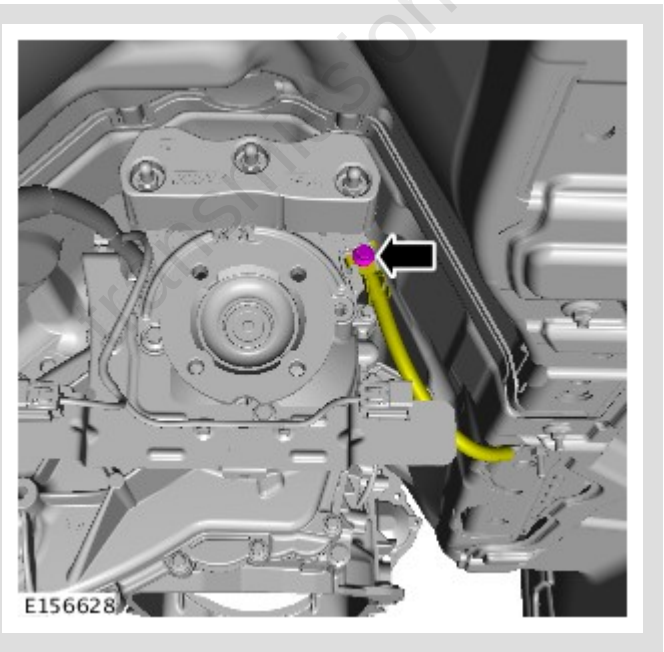

Install the earth strap.

Torque: **25 Nm**

transmissionmanuals.com

9.

CAUTION:

Make sure that new bolts are installed.

NOTE:

Make sure that the component is installed to the position noted on removal.

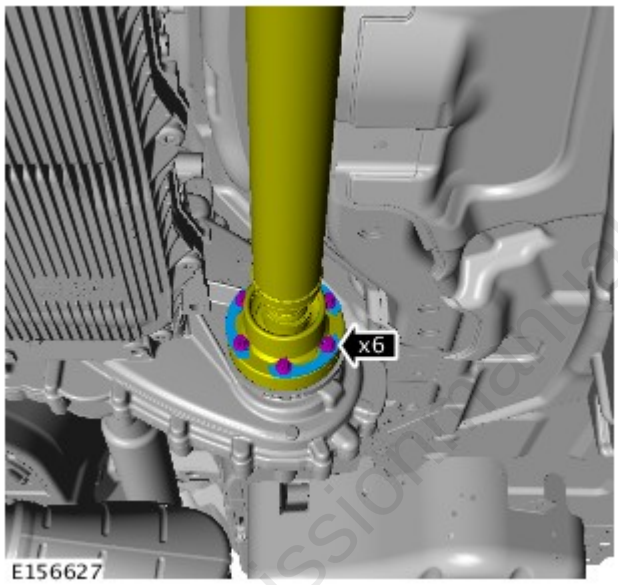

Renew Part: Driveshaft to front output flange bolts Quantity: 6 .

Torque:

Stage 1 **45 Nm**

Stage 2 **90 Nm**

10. Install the rear driveshaft.

Refer to: Rear Driveshaft - TDV6 3.0L Diesel (205-01 Driveshaft, Removal and Installation).

transmissionmanuals.com

11.

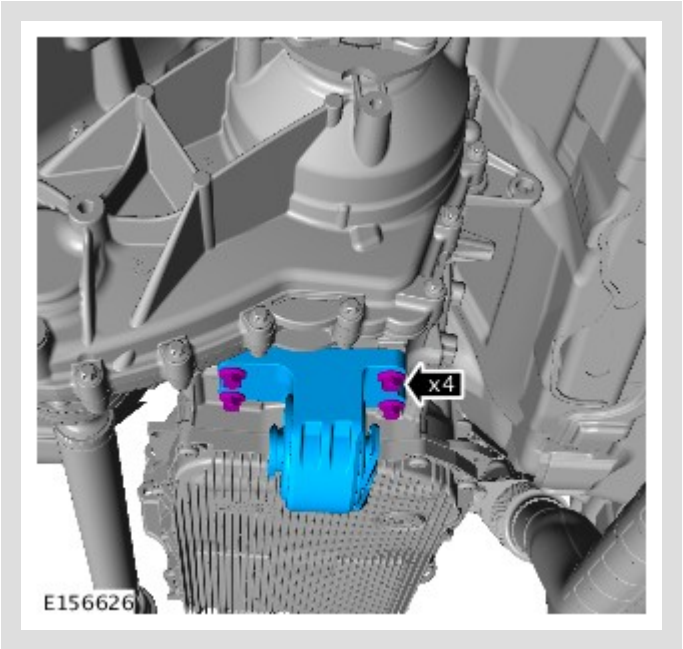

Install the transfer case damper.
Torque: 60 Nm

12. Install the transmission support crossmember.
Refer to: Transmission Support Crossmember - TDV6 3.0L Diesel (502-02 Full Frame and Body Mounting, Removal and Installation).

13. Refill the transfer case with the recommended fluid.
Refer to: Transfer Case Draining and Filling (308-07 Transfer Case - [+] Single Speed Transfer Case, General Procedures).

14. Connect the battery ground cable.
Refer to: Specifications (414-00 Battery and Charging System - General Information, Specifications).

transmissionmanuals.com

PUBLISHED: 21-NOV-2016
2022.0 DEFENDER (LE), 308-07

TRANSFER CASE - [+] TWIN SPEED TRANSFER CASE

TRANSFER CASE - TDV6 3.0L DIESEL

(G1972537)

INSTALLATION

41.20.25	TRANSFER GEARBOX - RENEW	3000 CC, TDV6, SINGLE SPEED TRANSFER CASE, WITH PARTICULATE FILTER, WITH DIESEL EXHAUST FLUID	4.5	USED WITHINS	
41.20.25	TRANSFER GEARBOX - RENEW	3000 CC, TDV6, SINGLE SPEED TRANSFER CASE, WITH PARTICULATE FILTER, WITHOUT DIESEL EXHAUST FLUID	3.7	USED WITHINS	
41.20.25	TRANSFER GEARBOX - RENEW	3000 CC, TDV6, TWIN SPEED TRANSFER CASE, WITH PARTICULATE FILTER,	4.4	USED WITHINS	

transmissionmanuals.com

		WITH DIESEL EXHAUST FLUID			
41.20.25	TRANSFER GEARBOX - RENEW	3000 CC, TDV6, TWIN SPEED TRANSFER CASE, WITH PARTICULATE FILTER, WITHOUT DIESEL EXHAUST FLUID	3.7	USED WITHINS	

INSTALLATION

SPECIAL TOOL(S)



303-1069

Adapter, Wrench

transmissionmanuals.com

GENERAL EQUIPMENT

EQUIPMENT NAME
Transmission jack

PART(S)

STEP	PART NAME	QUANTITY
Step 4	Transfer case connecting sleeve O-ring seal	1
Step 11	Driveshaft flange bolts	1

NOTE:

Some variation in the illustrations may occur, but the essential information is always correct.

1.

NOTE:

This step is only required if previously removed.

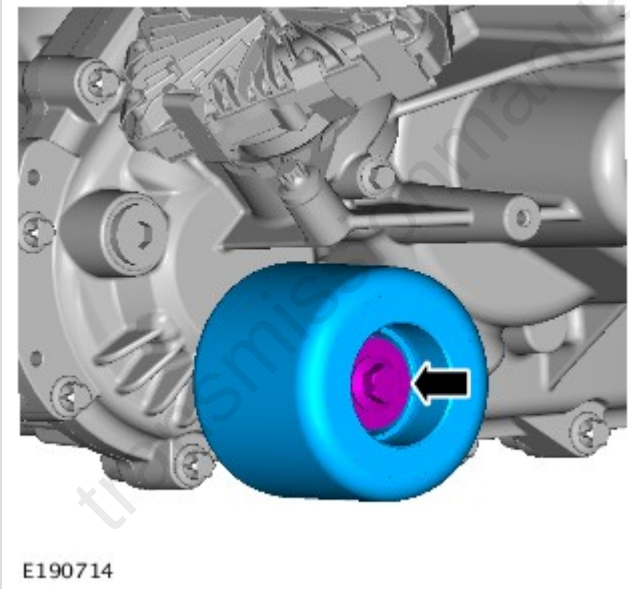

E190714

Install the damper

Torque: **72 Nm**

2.

NOTE:

This step is only required if previously removed.

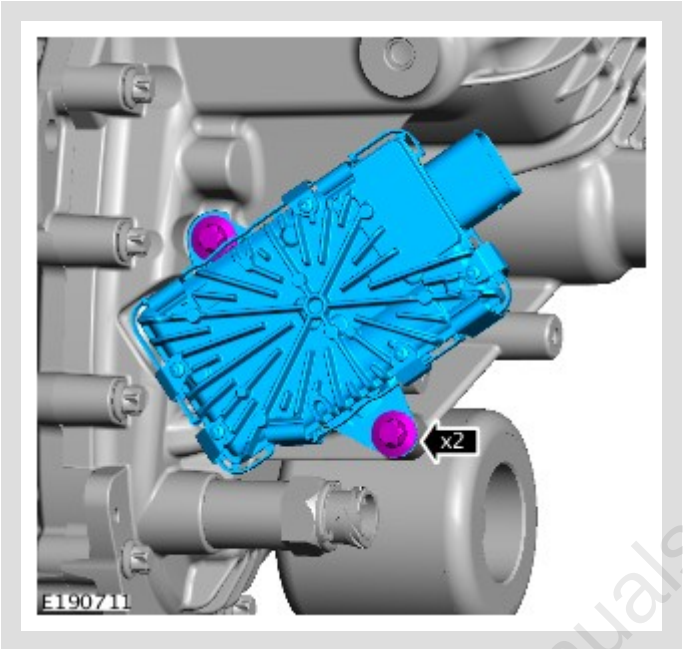

Install the motor.

Torque: **35 Nm**

transmissionmanuals.com

3.

NOTE:

This step is only required if previously removed.

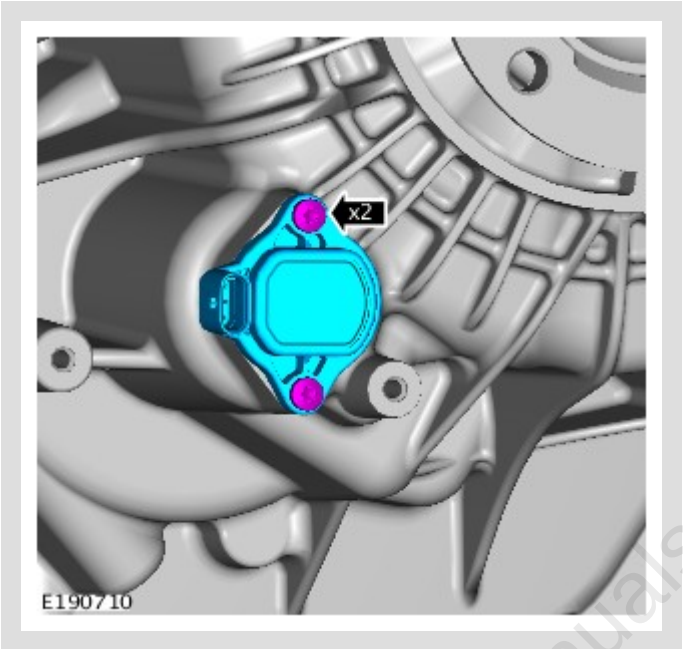

Install the sensor.

Torque: **5 Nm**

transmissionmanuals.com

4.

NOTE:

This step is only required if previously removed.

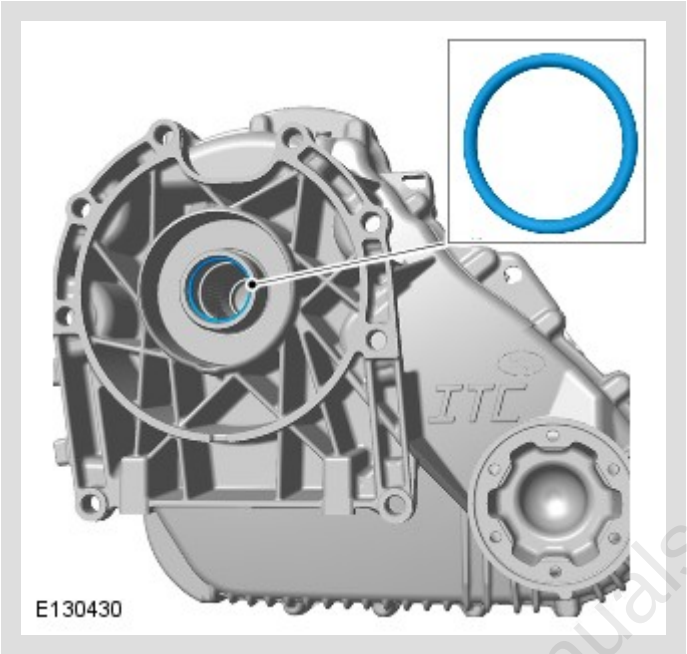

Install a new input shaft oil seal.

Renew Part: Transfer case connecting sleeve O-ring seal Quantity: 1 .

transmissionmanuals.com

5.

WARNING:

Secure the component to the transmission jack.

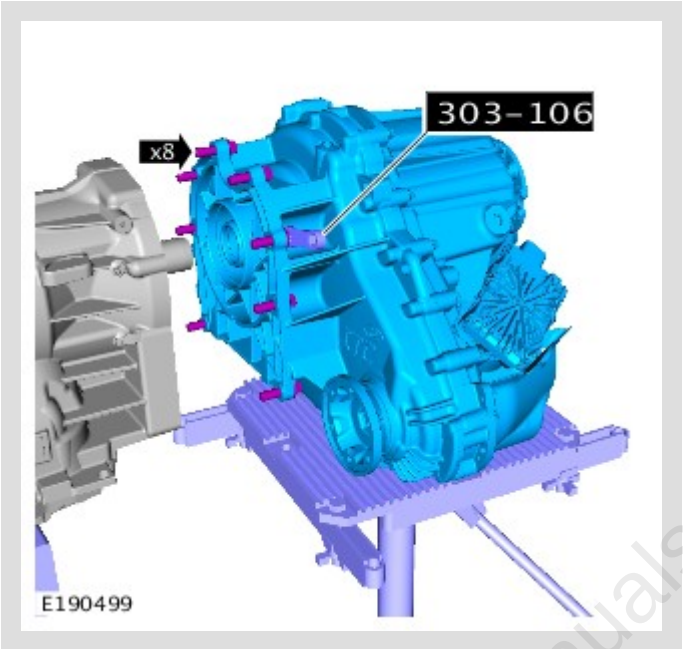

Install the transfer case.

Special Tool(s): 303-1069

General Equipment: Transmission jack

Torque: **45 Nm**

6.

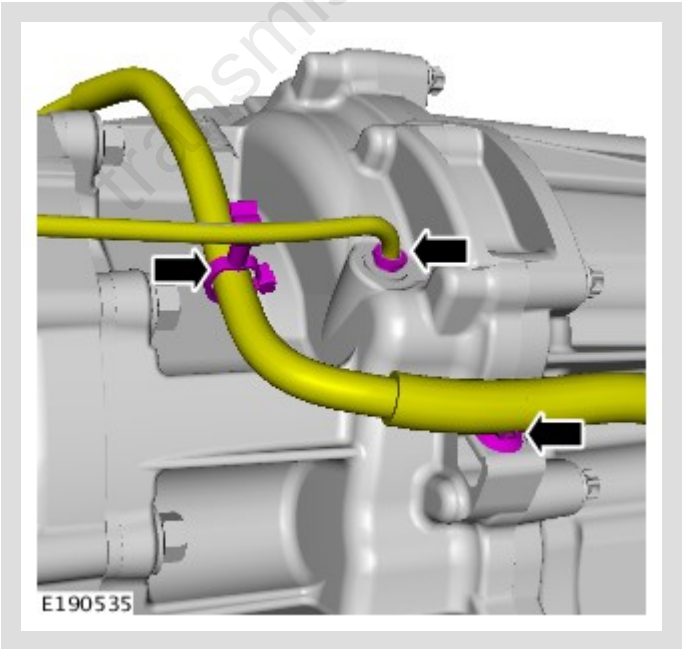

Install the breather pipe.

transmissionmanuals.com

7.

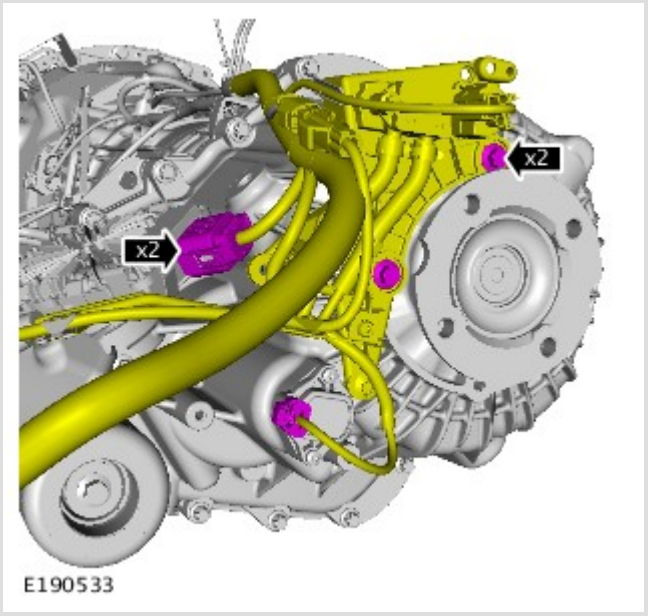

- Vehicles with diesel particulate filter (DPF).
- Install the wiring harness.
  Torque: **25 Nm**

8.

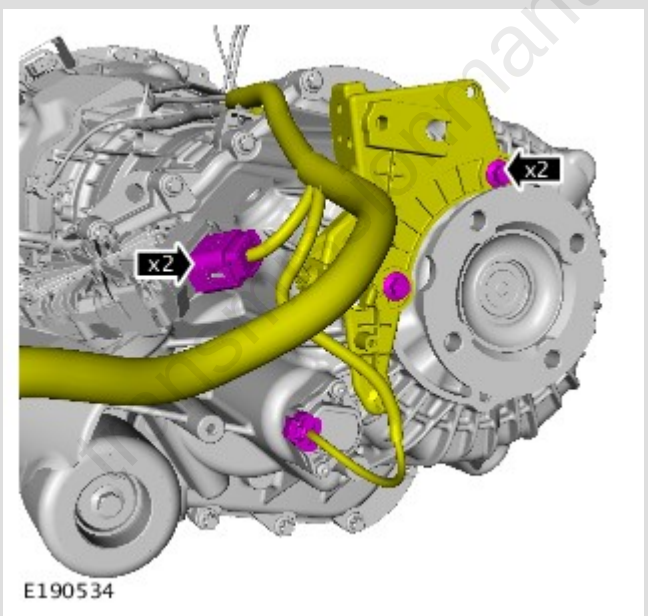

- Vehicles without diesel particulate filter (DPF).
- Install the wiring harness.
  Torque: **25 Nm**

9.

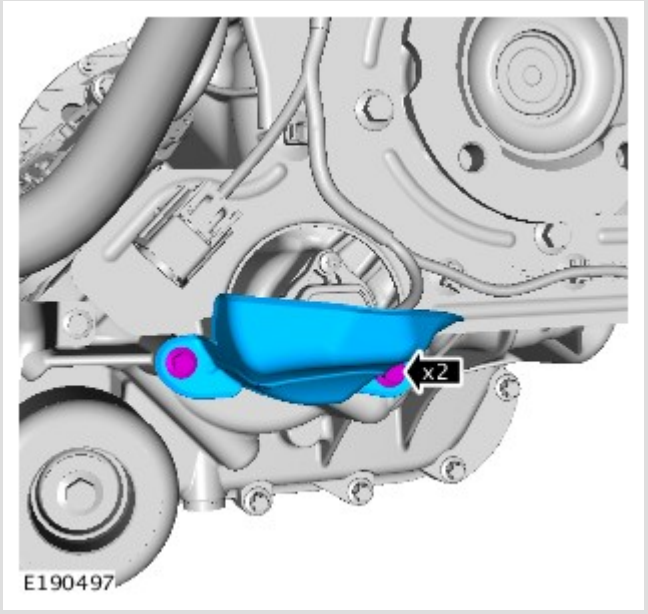

Install the heat shield.

Torque: **8 Nm**

10.

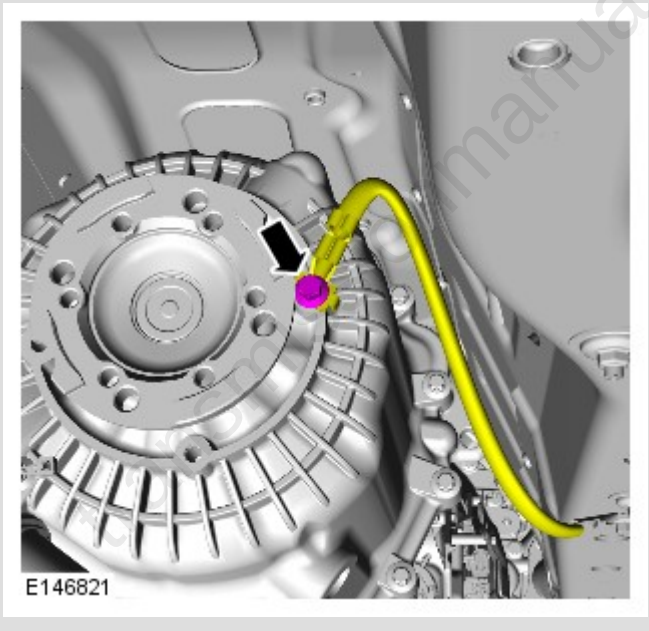

Connect the ground cable.

Torque: **25 Nm**

11.

CAUTION:

Make sure that new bolts are installed.

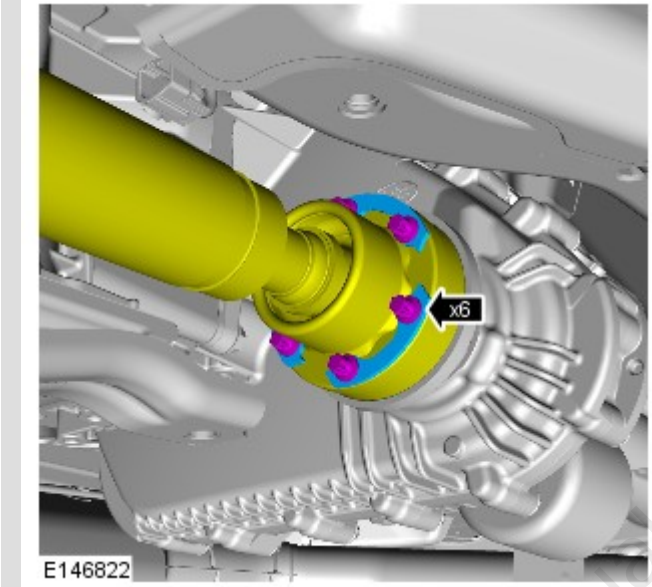

Install the Front driveshaft.

Renew Part: Driveshaft flange bolts Quantity: 1 .

Torque:

Stage 1 **45 Nm**

Stage 2 **90 Nm**

12.

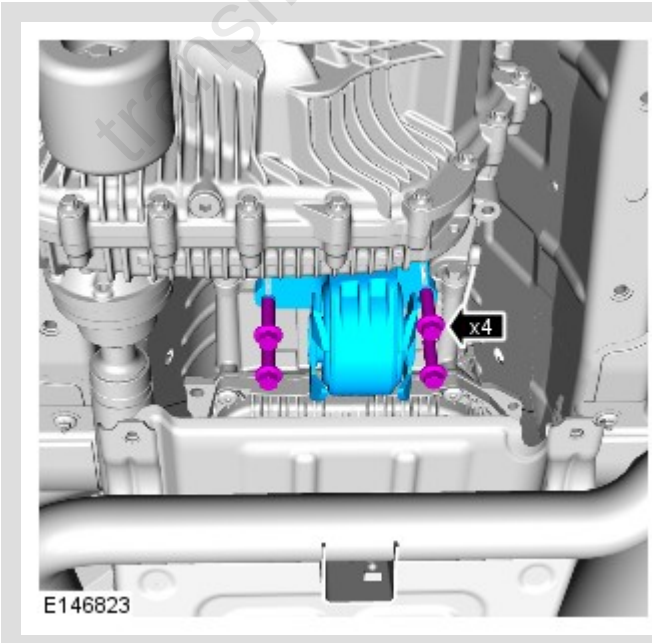

Install the damper.

Torque: **60 Nm**

transmissionmanuals.com

13. Install the rear driveshaft.
Refer to: Rear Driveshaft - TDV6 3.0L Diesel (205-01, Removal and Installation).

14. Install the transmission support crossmember.
Refer to: Transmission Support Crossmember - TDV6 3.0L Diesel (502-02, Removal and Installation).

15. Connect the battery ground cable.
Refer to: Specifications (414-00, Specifications).

16.
- Calibrate the transfer case using the diagnostic equipment.
- Connect the Land Rover approved diagnostic equipment.
- Start the diagnostic service function "transfer case-transfer case control module replacement".
- Start the service function "transfer case-absolute position sensor replacement".
- Clear any Diagnostic Trouble Codes (DTCs) after calibration and check for correct operation.

17. Fill the transfer case with the recommended fluid.
Refer to: Transfer Case Draining and Filling (308-07, General Procedures).

transmissionmanuals.com

PUBLISHED: 05-MAY-2017
2022.0 DEFENDER (LE), 308-07

TRANSFER CASE - [+] SINGLE SPEED TRANSFER CASE

TRANSFER CASE - TDV6 3.0L DIESEL

(G1972531)

REMOVAL

41.20.25	TRANSFER GEARBOX - RENEW	3000 CC, TDV6, SINGLE SPEED TRANSFER CASE, WITH PARTICULATE FILTER, WITH DIESEL EXHAUST FLUID	4.5	USED WITHINS	
41.20.25	TRANSFER GEARBOX - RENEW	3000 CC, TDV6, SINGLE SPEED TRANSFER CASE, WITH PARTICULATE FILTER, WITHOUT DIESEL EXHAUST FLUID	3.7	USED WITHINS	
41.20.25	TRANSFER GEARBOX - RENEW	3000 CC, TDV6, TWIN SPEED TRANSFER CASE, WITH PARTICULATE FILTER,	4.4	USED WITHINS	

transmissionmanuals.com

		WITH DIESEL EXHAUST FLUID			
41.20.25	TRANSFER GEARBOX - RENEW	3000 CC, TDV6, TWIN SPEED TRANSFER CASE, WITH PARTICULATE FILTER, WITHOUT DIESEL EXHAUST FLUID	3.7	USED WITHINS	

REMOVAL

SPECIAL TOOL(S)



100-012-01

Slide Hammer Adapter



303-1069

Adapter, Wrench

transmissionmanuals.com



JLR-308-932

Remover, Oil Seal

GENERAL EQUIPMENT

EQUIPMENT NAME
Transmission jack

PART(S)

STEP	PART NAME	QUANTITY
Step 7	Driveshaft to front output flange bolts	6
Step 14	Transfer case input shaft oil seal	1

NOTE:

Some variation in the illustrations may occur, but the essential information is always correct.

1. Disconnect the battery ground cable.
   Refer to: Specifications (414-00 Battery and Charging System - General Information, Specifications).

transmissionmanuals.com

2.

WARNING:

Make sure to support the vehicle with axle stands.

Raise and support the vehicle.

3. Drain the transfer case fluid.
Refer to: Transfer Case Draining and Filling (308-07 Transfer Case - Vehicles With: Single Speed Transfer Case, General Procedures).

4. Remove the transmission support crossmember.
Refer to: Transmission Support Crossmember - TDV6 3.0L Diesel (502-02 Full Frame and Body Mounting, Removal and Installation).

5.

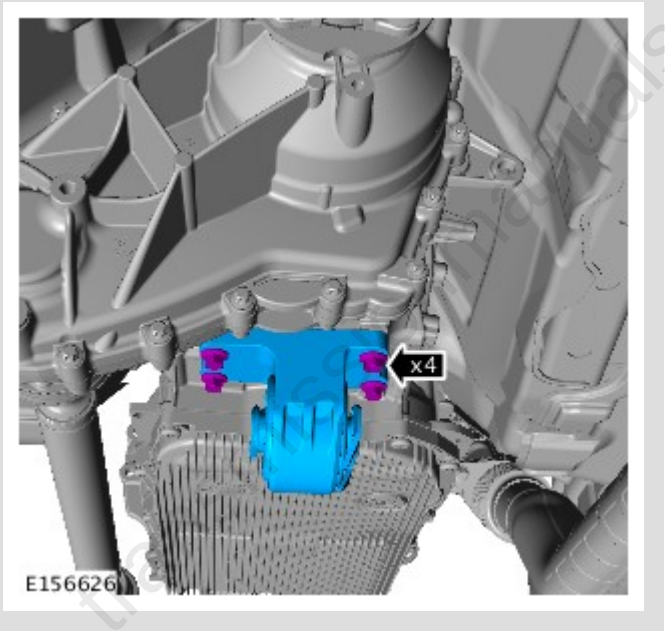

Remove the transfer case damper.

6. Remove the rear driveshaft.
Refer to: Rear Driveshaft - TDV6 3.0L Diesel (205-01 Driveshaft, Removal and Installation).

7.

CAUTION:

Mark the position of the driveshaft flange in relation to the drive pinion flange.

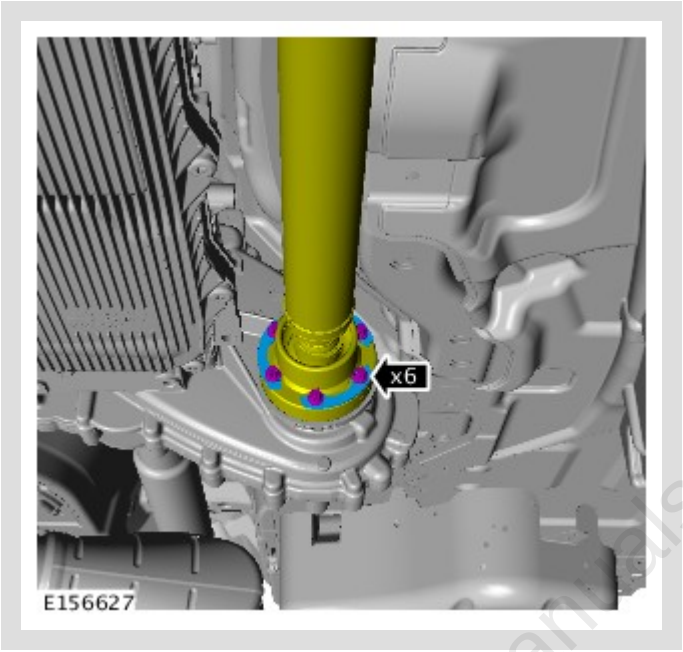

Renew Part: Driveshaft to front output flange bolts Quantity: 6 .

8.

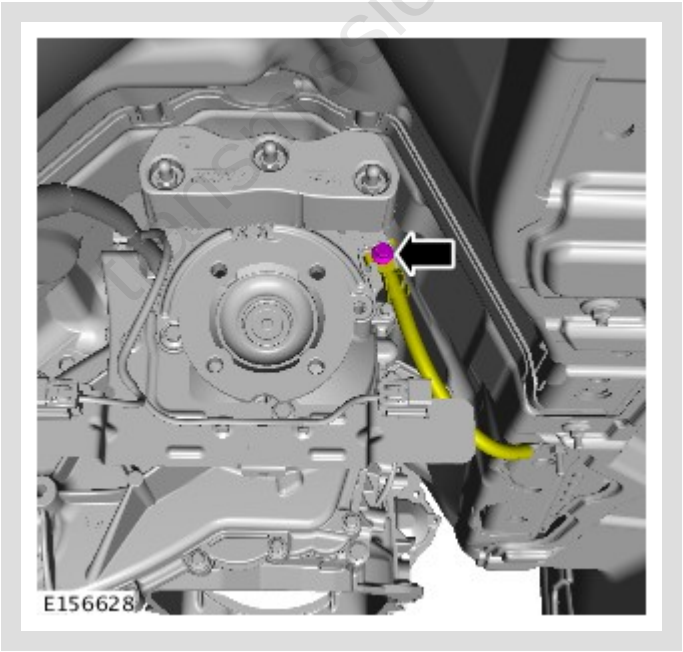

Remove the earth strap.

9.

NOTE:

If equipped.

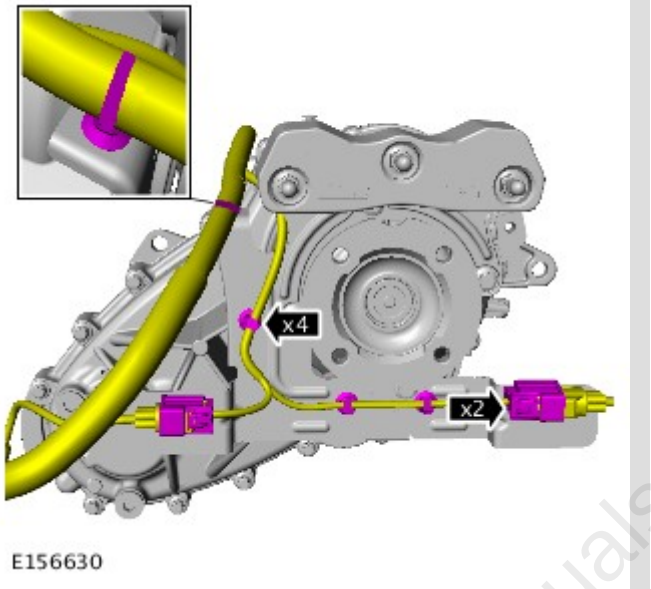

Release the wiring harness.

10.

NOTE:

If equipped.

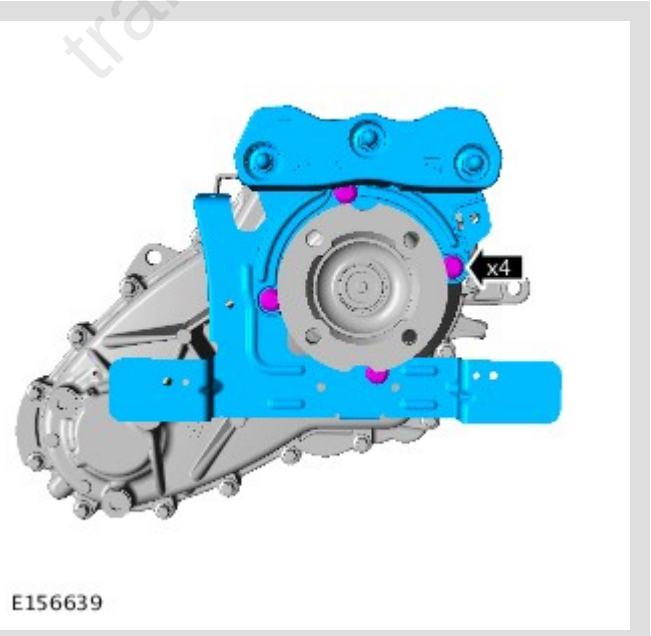

transmissionmanuals.com

11.

CAUTION:

Always plug any open connections to prevent contamination.

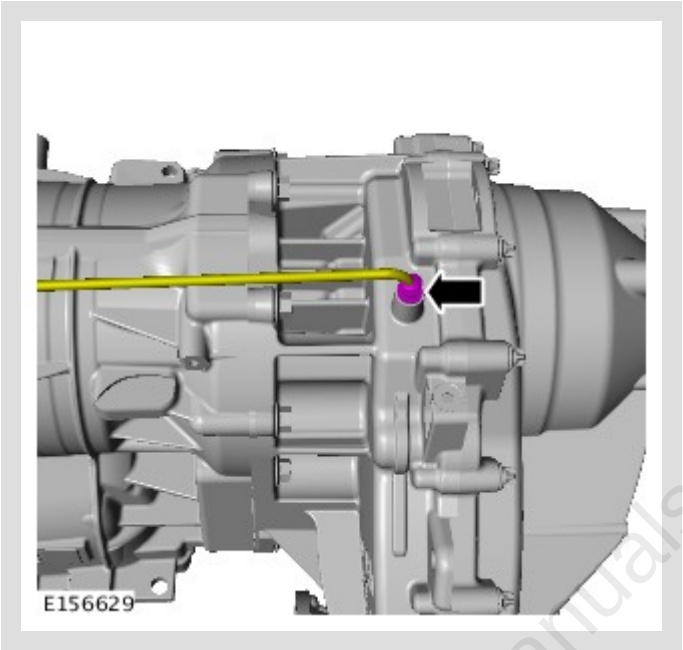

Remove the breather pipe.

transmissionmanuals.com

12.

WARNING:

Secure the component to the transmission jack.

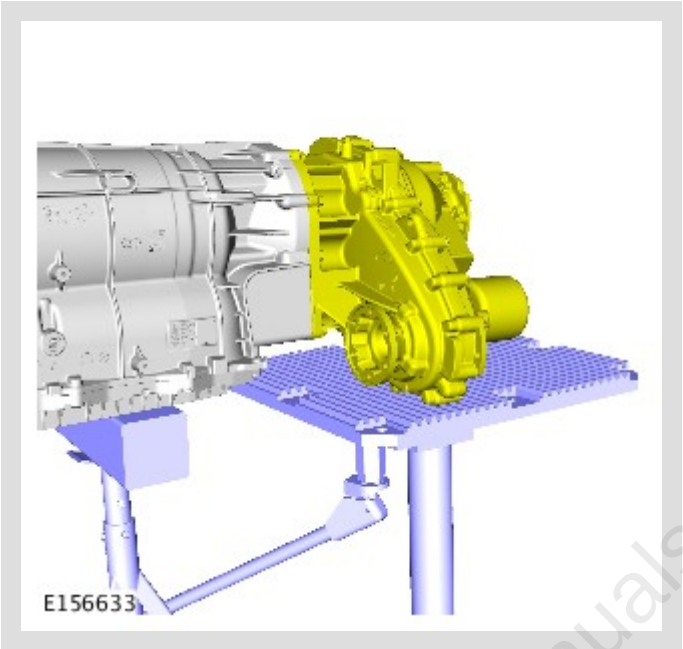

General Equipment: Transmission jack

13.

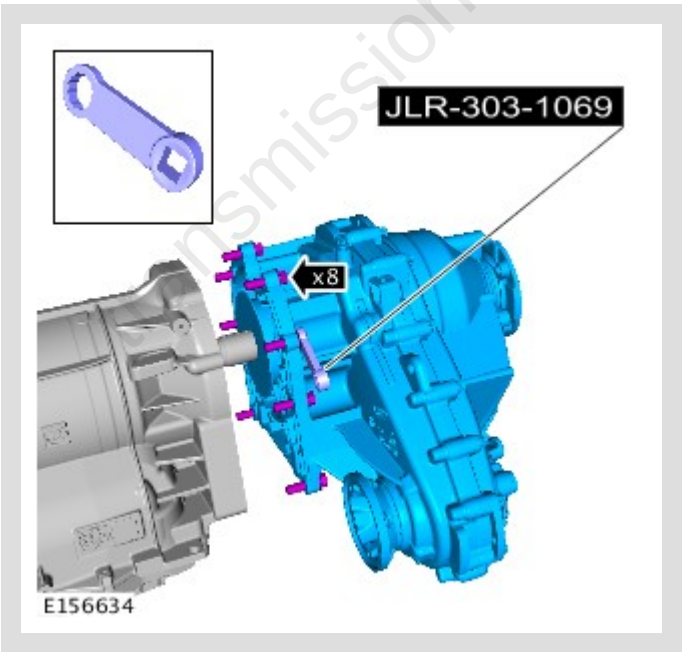

Special Tool(s): 303-1069

transmissionmanuals.com

14.

CAUTION:

Do not carry out this step if a new transfer box is to be installed.

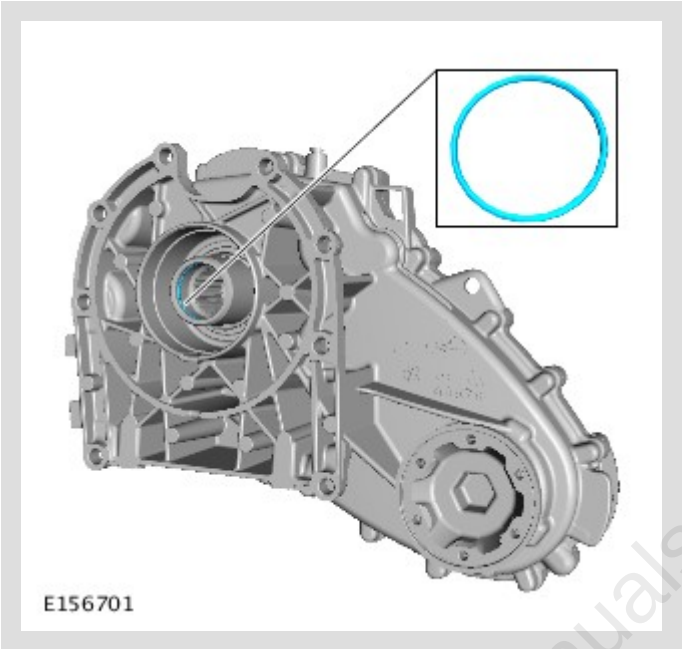

Remove and discard the O-ring seal.

Renew Part: Transfer case input shaft oil seal Quantity: 1 .

transmissionmanuals.com

15.

CAUTION:

Care must be taken to avoid damage to the seal register and running surface.

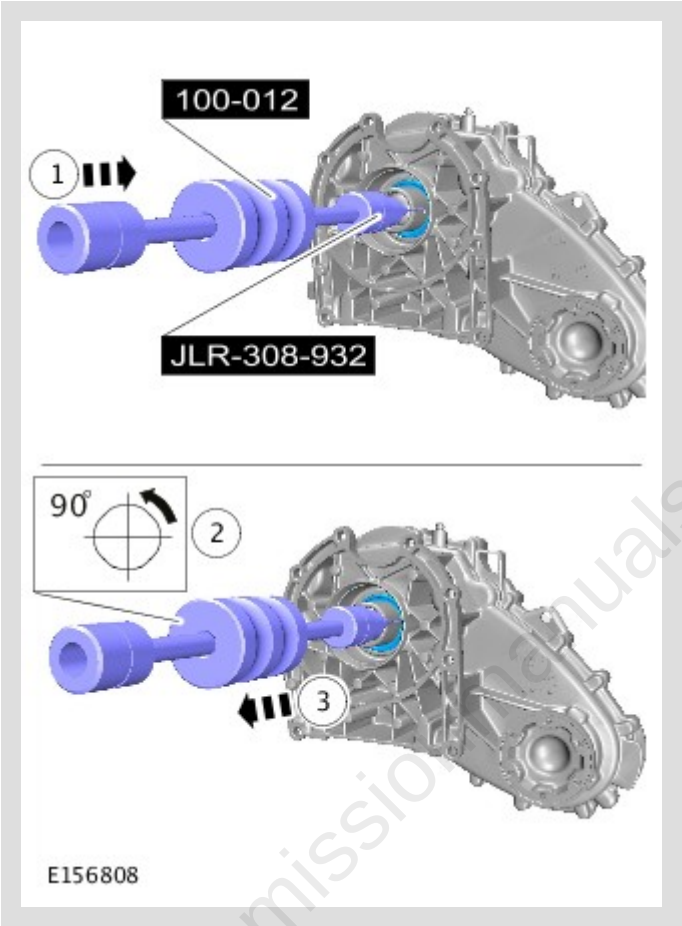

Special Tool(s): 100-012-01 , JLR-308-932

transmissionmanuals.com

PUBLISHED: 30-MAR-2017
2022.0 DEFENDER (LE), 308-07

TRANSFER CASE - [+] TWIN SPEED TRANSFER CASE

TRANSFER CASE - TDV6 3.0L DIESEL

(G1972535)

REMOVAL

41.20.25	TRANSFER GEARBOX - RENEW	3000 CC, TDV6, SINGLE SPEED TRANSFER CASE, WITH PARTICULATE FILTER, WITH DIESEL EXHAUST FLUID	4.5	USED WITHINS	
41.20.25	TRANSFER GEARBOX - RENEW	3000 CC, TDV6, SINGLE SPEED TRANSFER CASE, WITH PARTICULATE FILTER, WITHOUT DIESEL EXHAUST FLUID	3.7	USED WITHINS	
41.20.25	TRANSFER GEARBOX - RENEW	3000 CC, TDV6, TWIN SPEED TRANSFER CASE, WITH PARTICULATE FILTER,	4.4	USED WITHINS	

transmissionmanuals.com

		WITH DIESEL EXHAUST FLUID			
41.20.25	TRANSFER GEARBOX - RENEW	3000 CC, TDV6, TWIN SPEED TRANSFER CASE, WITH PARTICULATE FILTER, WITHOUT DIESEL EXHAUST FLUID	3.7	USED WITHINS	

REMOVAL

SPECIAL TOOL(S)



303-1069

Adapter, Wrench

transmissionmanuals.com

GENERAL EQUIPMENT

EQUIPMENT NAME
Transmission jack

PART(S)

STEP	PART NAME	QUANTITY
Step 7	Driveshaft flange bolts	1
Step 14	Transfer case front output shaft oil seal	1

CAUTION:

Before disconnecting any components, make sure the area is clean and free from foreign material. When disconnected all openings must be sealed.

NOTE:

Some variation in the illustrations may occur, but the essential information is always correct.

1. Disconnect the battery ground cable.
   Refer to: Specifications (414-00 Battery and Charging System - General Information, Specifications).

2. **WARNING:**

   Make sure to support the vehicle with axle stands.

   Raise and support the vehicle.

3. Drain the transfer case.
   Refer to: Transfer Case Draining and Filling (308-07 Transfer Case - Vehicles With: Twin Speed Transfer Case, General Procedures).

4. Remove the transmission support crossmember.
   Refer to: Transmission Support Crossmember - TDV6 3.0L Diesel (502-02 Full Frame and Body Mounting, Removal and Installation).

5. Remove the rear driveshaft.
   Refer to: Rear Driveshaft - TDV6 3.0L Diesel (205-01 Driveshaft, Removal and Installation).

transmissionmanuals.com

6.

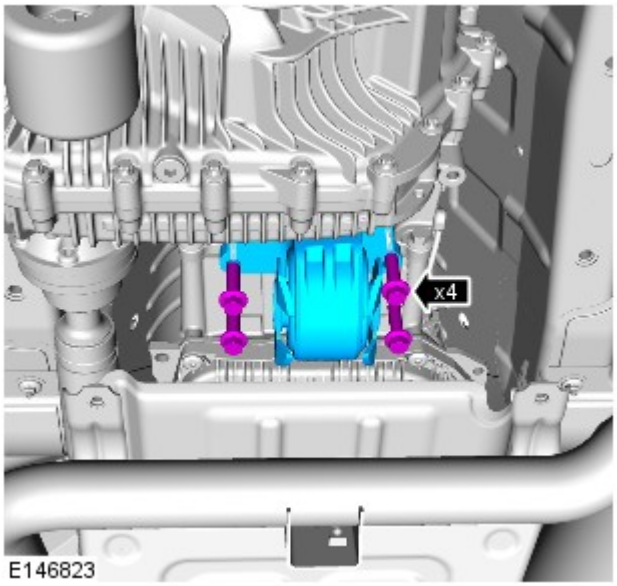

Remove the damper.

7.

CAUTION:

Mark the position of the driveshaft flange in relation to the drive pinion flange.

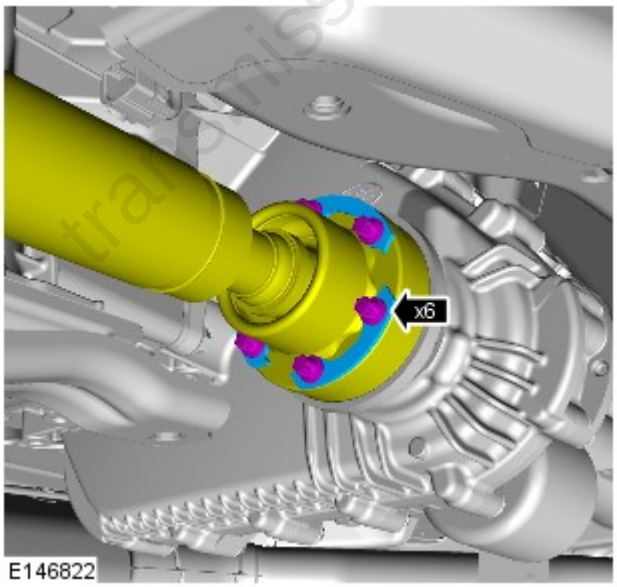

Remove the front driveshaft from the transfer case assembly.
Renew Part: Driveshaft flange bolts Quantity: 1 .

transmissionmanuals.com

8.

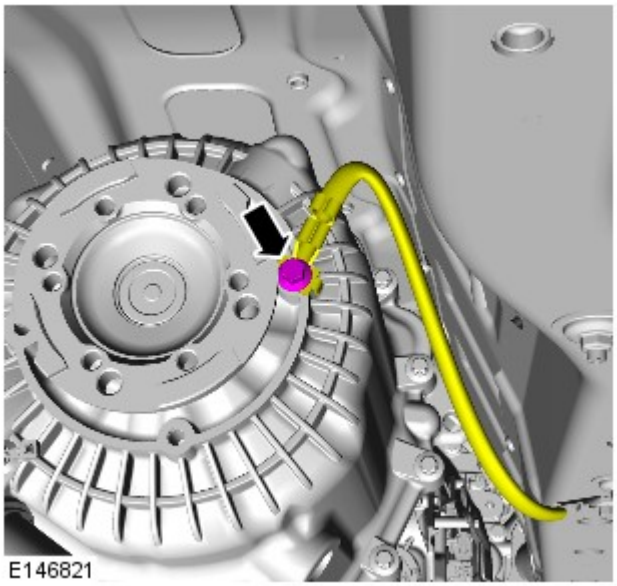

Remove the ground cable.

9.

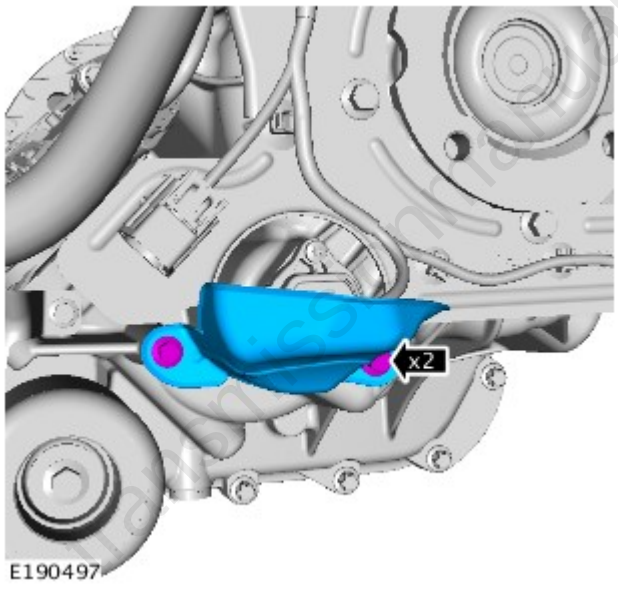

Remove the heat shield.

10.

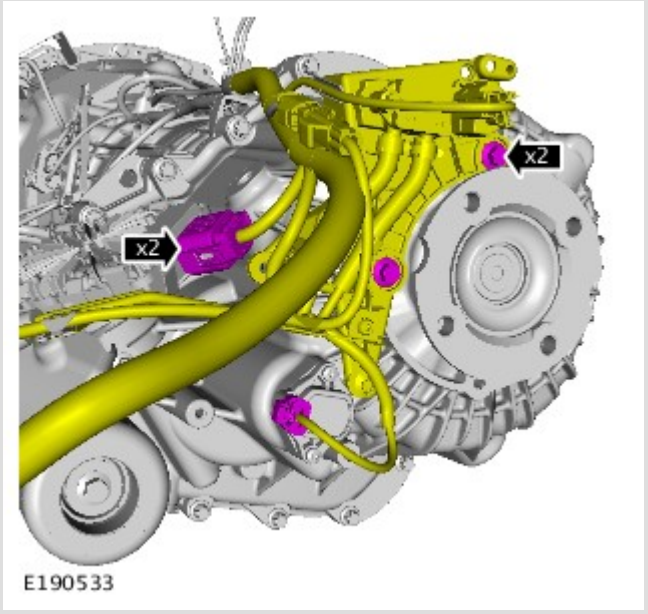

- Vehicles with diesel particulate filter (DPF).
- Release the wiring loom.

11.

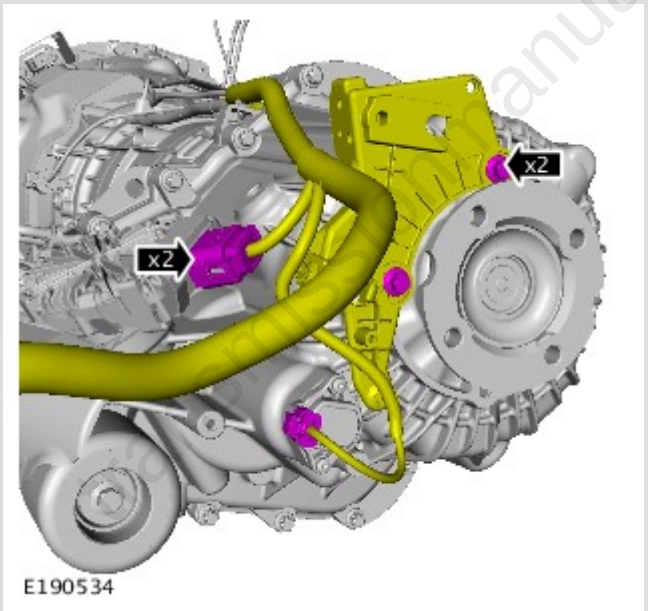

- Vehicles without diesel particulate filter (DPF).
- Release the wiring loom.

12.

CAUTION:

Always plug any open connections to prevent contamination.

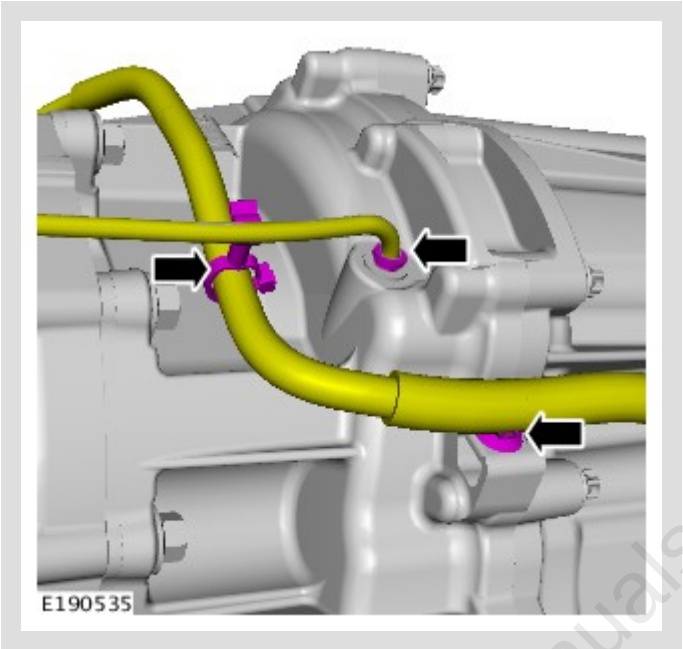

Remove the breather pipe.

transmissionmanuals.com

13.

WARNING:

Secure the component to the transmission jack.

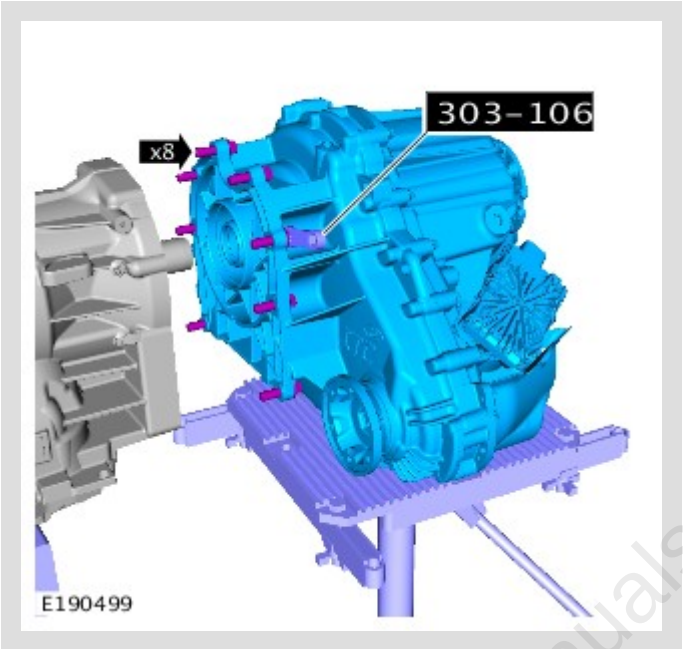

Remove the transfer case.

Special Tool(s): 303-1069

General Equipment: Transmission jack

transmissionmanuals.com

14.

CAUTION:

Do not carry out this step if a new transfer box is to be installed.

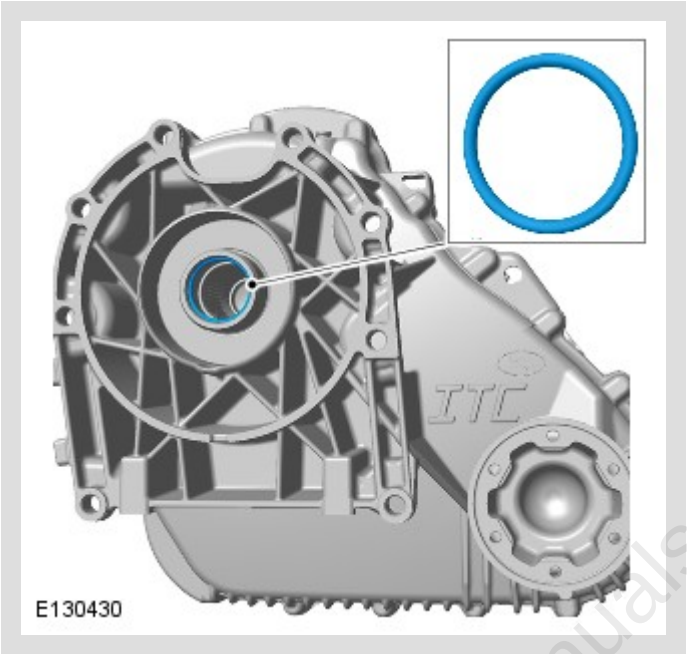

Remove and discard the input shaft oil seal.

Renew Part: Transfer case front output shaft oil seal Quantity: 1 .

transmissionmanuals.com

15.

NOTE:

Do not disassemble further if the component is removed for access only.

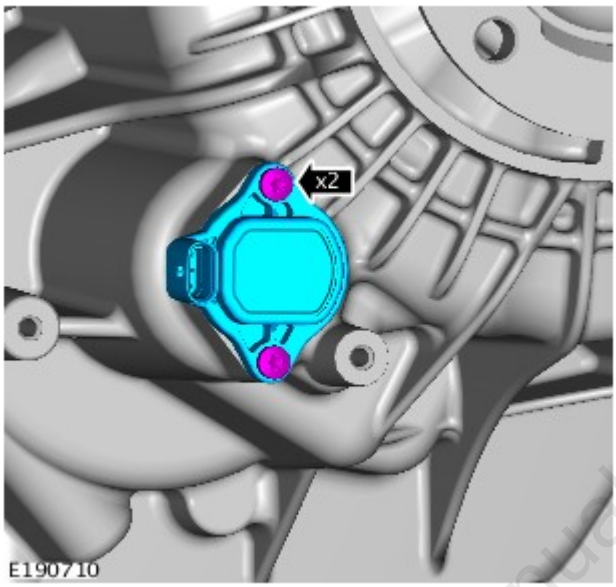

Remove the sensor.

16.

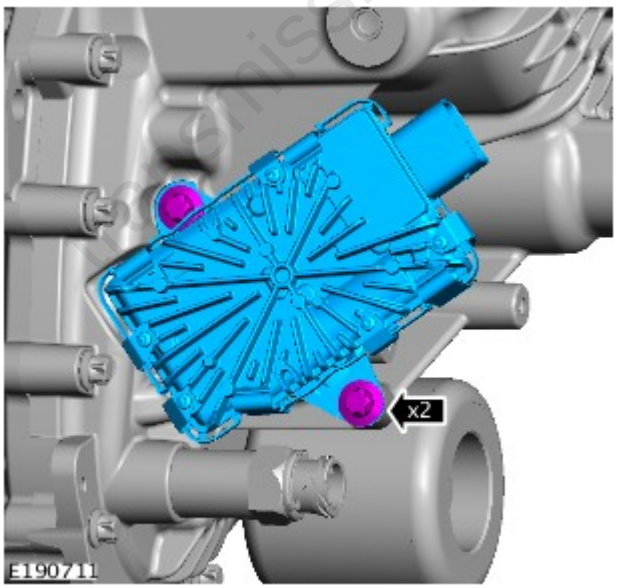

Remove the motor.

transmissionmanuals.com

17.

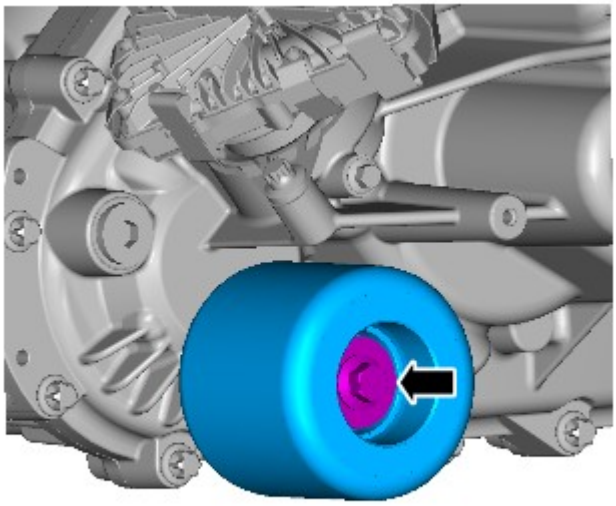

E190714

Remove the damper.

transmissionmanuals.com

PUBLISHED: 28-APR-2017
2022.0 DEFENDER (LE), 308-07

TRANSFER CASE - [+] SINGLE SPEED TRANSFER CASE

TRANSFER CASE CONNECTING SLEEVE SEALS (G2006821)

REMOVAL AND INSTALLATION

SPECIAL TOOL(S)



100-012

Slide Hammer



307-520

Installer, Output Shaft Seal

transmissionmanuals.com



JLR-308-930

Installer, Oil Seal



JLR-308-932

Remover, Oil Seal

transmissionmanuals.com

PART(S)

STEP	PART NAME	QUANTITY
Installation Step 1	Transfer case input shaft oil seal	1

REMOVAL

NOTE:

- Some variation in the illustrations may occur, but the essential information is always correct.
- Some components shown removed for clarity.

1. Disconnect the battery ground cable.
Refer to: Specifications (414-00 Battery and Charging System - General Information, Specifications).

2. **WARNING:**

Make sure to support the vehicle with axle stands.

Raise and support the vehicle.

3. Remove the transfer case.
Refer to: Transfer Case - TDV6 3.0L Diesel (308-07 Transfer Case - Vehicles With: Single Speed Transfer Case, Removal).
Refer to: Transfer Case - V6 S/C 3.0L Petrol (308-07 Transfer Case - Vehicles With: Single Speed Transfer Case, Removal).
Refer to: Transfer Case - INGENIUM I4 2.0L Diesel (308-07 Transfer Case - Vehicles With: Single Speed Transfer Case, Removal).

transmissionmanuals.com

4.

CAUTION:

- Care must be taken to avoid damage to the seal register and running surface.
- Do not carry out this step if a new transfer box is to be installed.

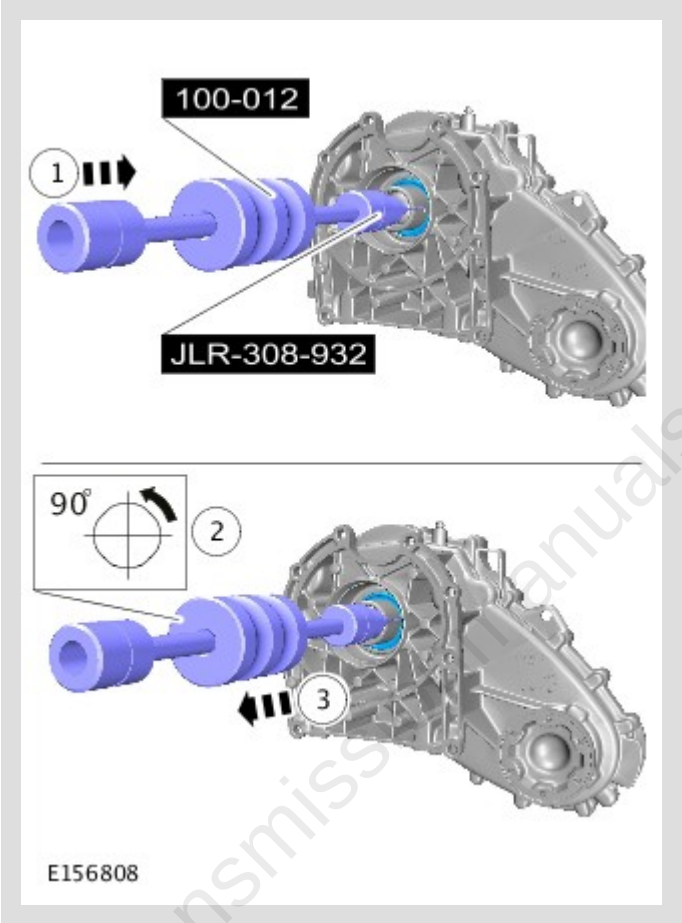

Carefully remove and discard the oil seal.
Special Tool(s): 100-012 , JLR-308-932

INSTALLATION

transmissionmanuals.com

1.

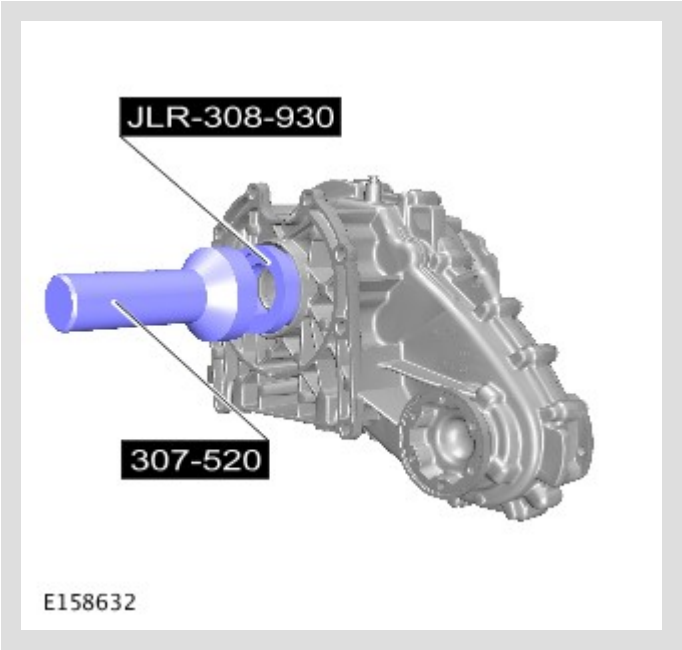

- Install a new seal.
  Special Tool(s): JLR-308-930 , 307-520
- *Renew Part: Transfer case input shaft oil seal Quantity: 1* .

2. Install the transfer case.
Refer to: Transfer Case - TDV6 3.0L Diesel (308-07 Transfer Case - Vehicles With: Single Speed Transfer Case, Installation).
Refer to: Transfer Case - V6 S/C 3.0L Petrol (308-07 Transfer Case - Vehicles With: Single Speed Transfer Case, Installation).
Refer to: Transfer Case - INGENIUM I4 2.0L Diesel (308-07 Transfer Case - Vehicles With: Single Speed Transfer Case, Installation).

3. Connect the battery ground cable.
Refer to: Specifications (414-00 Battery and Charging System - General Information, Specifications).

transmissionmanuels.com

PUBLISHED: 28-APR-2017
2022.0 DEFENDER (LE), 308-07

TRANSFER CASE - [+] TWIN SPEED TRANSFER CASE

TRANSFER CASE CONNECTING SLEEVE SEALS (G2006984)

REMOVAL AND INSTALLATION

SPECIAL TOOL(S)



100-012

Slide Hammer



100-012-01

Slide Hammer Adapter

transmissionmanuals.com

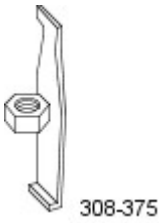

308-375

Remover, Input and Output Seal



308-598

Installer, Oil Seal

transmissionmanuals.com

PART(S)

STEP	PART NAME	QUANTITY
Installation Step 1	Transfer case input shaft oil seal	1

REMOVAL

NOTE:

- Some variation in the illustrations may occur, but the essential information is always correct.
- Some components shown removed for clarity.

1. Disconnect the battery ground cable.
Refer to: Specifications (414-00 Battery and Charging System - General Information, Specifications).

2. **WARNING:**

Make sure to support the vehicle with axle stands.

Raise and support the vehicle.

3. Remove the transfer case.
Refer to: Transfer Case - V6 S/C 3.0L Petrol (308-07 Transfer Case - Vehicles With: Twin Speed Transfer Case, Removal).
Refer to: Transfer Case - TDV6 3.0L Diesel (308-07 Transfer Case - Vehicles With: Twin Speed Transfer Case, Removal).
Refer to: Transfer Case - INGENIUM I4 2.0L Diesel (308-07 Transfer Case - Vehicles With: Twin Speed Transfer Case, Removal).

transmissionmanuals.com

4.

CAUTION:

Care must be taken to avoid damage to the seal register and running surface.

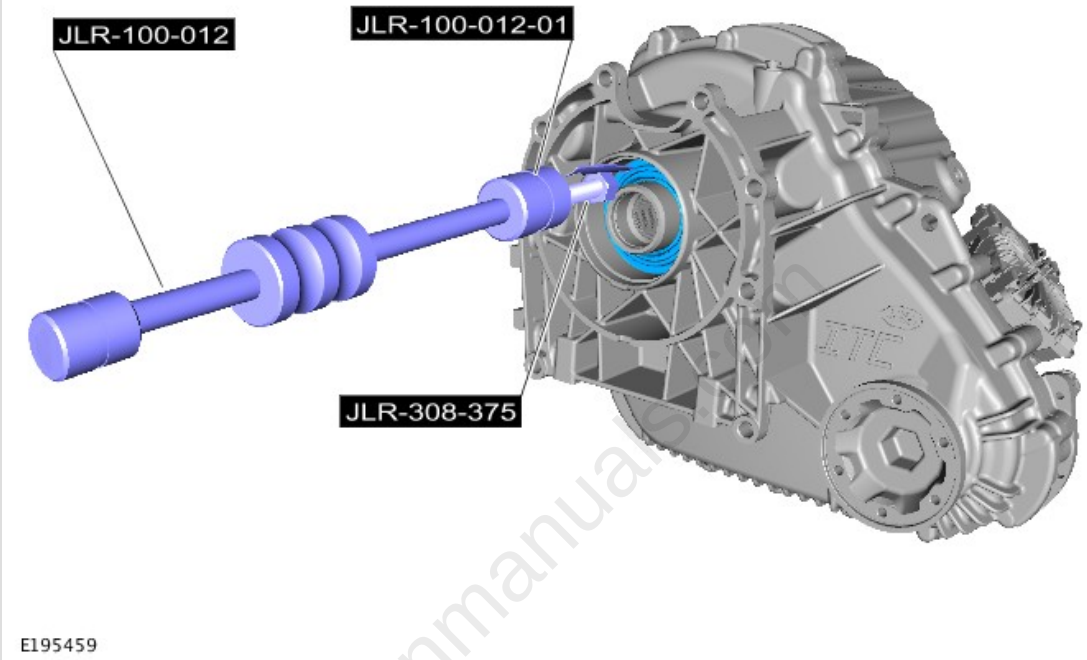

Carefully remove and discard the oil seal.
Special Tool(s): 100-012 , 100-012-01 , 308-375

INSTALLATION

transmissionmanuals.com

1.

CAUTION:

Oil seals must be installed dry.

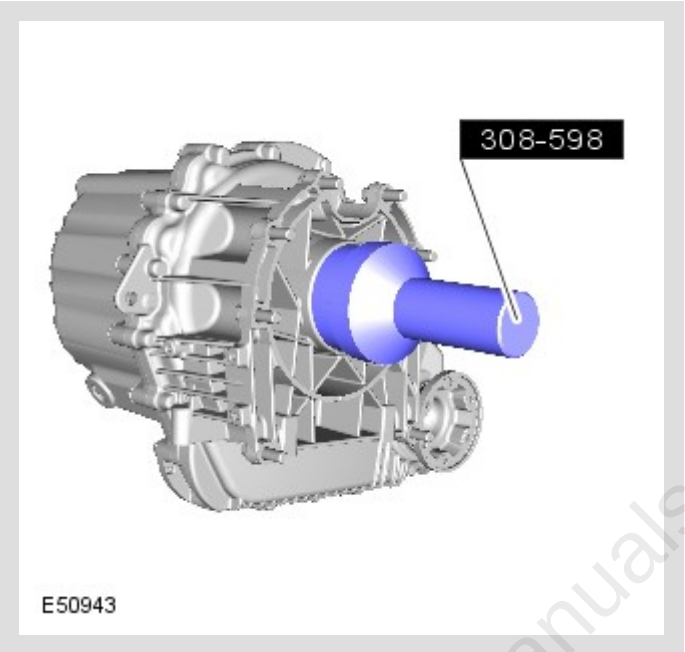

- Clean the seal register.
- Install the new oil seal.
  Renew Part: *Transfer case input shaft oil seal* *Quantity:* *1* .
- Use the special tool.
  Special Tool(s): 308-598

2. Install the transfer case.
Refer to: Transfer Case - V6 S/C 3.0L Petrol (308-07 Transfer Case - Vehicles With: Twin Speed Transfer Case, Installation).
Refer to: Transfer Case - TDV6 3.0L Diesel (308-07 Transfer Case - Vehicles With: Twin Speed Transfer Case, Installation).
Refer to: Transfer Case - INGENIUM I4 2.0L Diesel (308-07 Transfer Case - Vehicles With: Twin Speed Transfer Case, Installation).

3. Connect the battery ground cable.
Refer to: Specifications (414-00 Battery and Charging System - General Information, Specifications).

transmissionmanuals.com

transmissionmanuals.com

PUBLISHED: 30-MAR-2017
2022.0 DEFENDER (LE), 308-07

TRANSFER CASE - [+] SINGLE SPEED TRANSFER CASE

TRANSFER CASE DRAINING AND FILLING (G1970979)

GENERAL PROCEDURES

41.20.04	TRANSFER GEARBOX DRAIN AND REFILL	TWIN SPEED TRANSFER CASE	0.3	USED WITHINS

PART(S)

STEP	PART NAME	QUANTITY
Filling Step 1	Transfer case drain plug washer	1
Filling Step 4	Transfer case drain plug washer	1

DRAINING

NOTE:

Some variation in the illustrations may occur, but the essential information is always correct.

transmissionmanuals.com

1.

WARNING:

Make sure to support the vehicle with axle stands.

Raise and support the vehicle.

2. Position a container to collect the fluid.

3.

CAUTION:

Make sure that the area around the component is clean and free of foreign material.

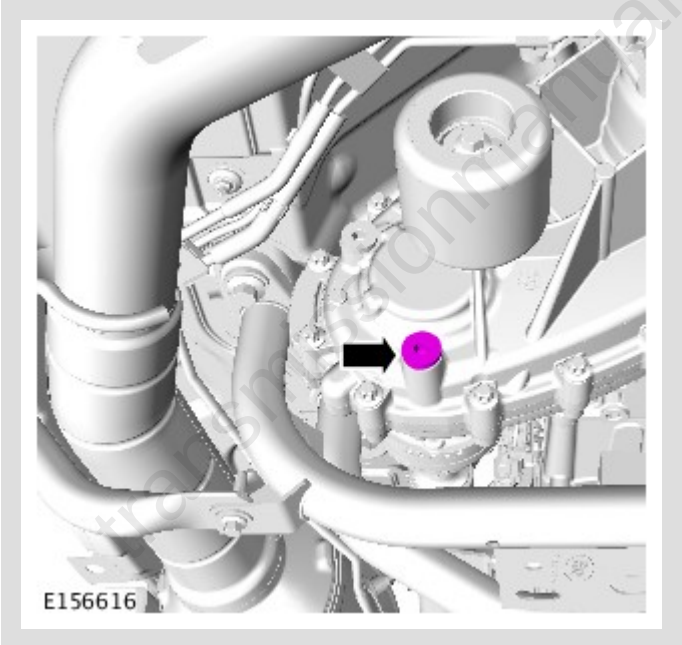

Remove and discard the sealing washer.

4. Allow the fluid to drain.

FILLING

transmissionmanuals.com

1.

NOTE:

Make sure that all the component mating faces are clean.

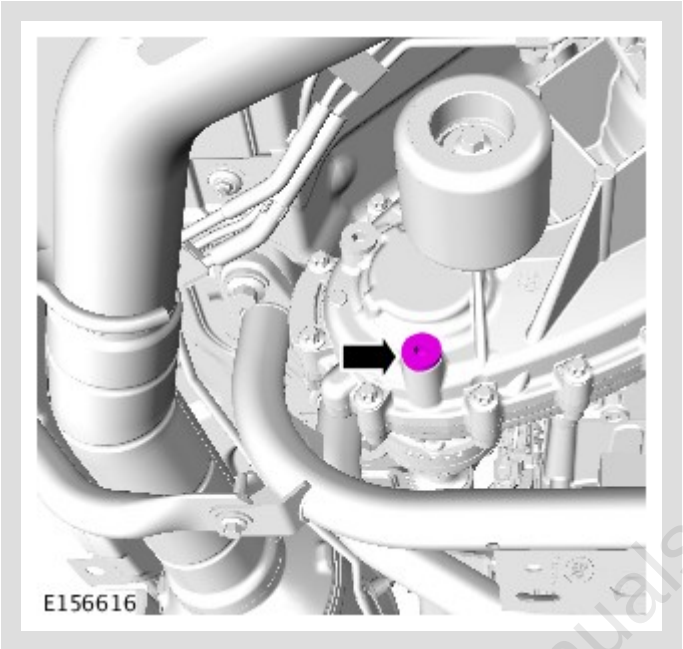

Install a new sealing washer.

Renew Part: *Transfer case drain plug washer* *Quantity:* *1* .

Torque: **28 Nm**

transmissionmanuals.com

2.

CAUTION:

Make sure that the area around the component is clean and free of foreign material.

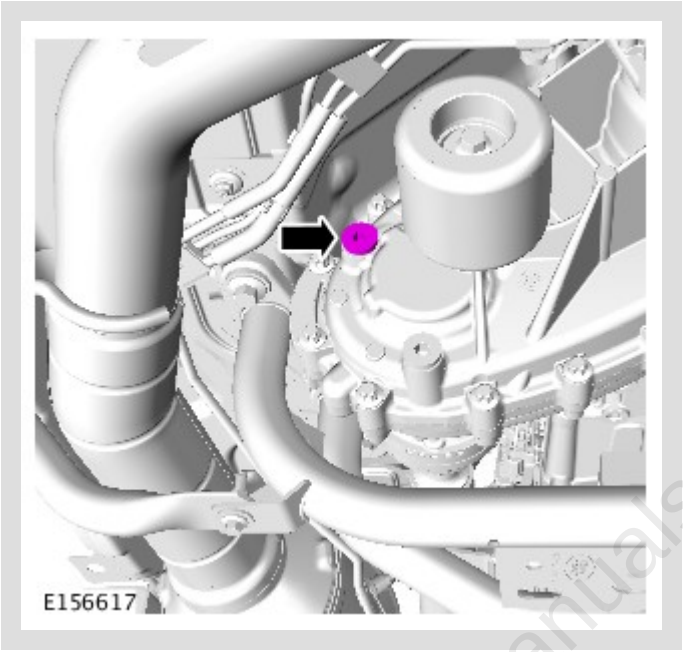

Remove and discard the sealing washer.

3. Refill transfer case with the recommended fluid, until the fluid is level with bottom of filler/level plug hole.
Refer to: Specifications (308-07 Transfer Case - Vehicles With: Single Speed Transfer Case, Specifications).

transmissionmanuals.com

4.

NOTE:

Make sure that all the component mating faces are clean.

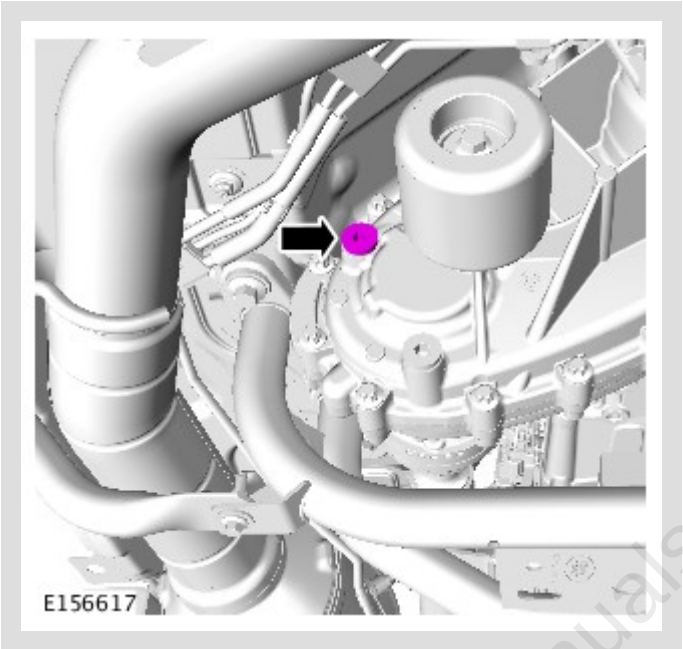

Install a new sealing washer.

Renew Part: *Transfer case drain plug washer* *Quantity:* *1* .

Torque: **28 Nm**

transmissionmanuals.com

PUBLISHED: 21-NOV-2016
2022.0 DEFENDER (LE), 308-07

TRANSFER CASE - [+] TWIN SPEED TRANSFER CASE

TRANSFER CASE DRAINING AND FILLING (G1970980)

GENERAL PROCEDURES

41.20.04	TRANSFER GEARBOX DRAIN AND REFILL	TWIN SPEED TRANSFER CASE	0.3	USED WITHINS

GENERAL EQUIPMENT

EQUIPMENT NAME
Land Rover diagnostic equipment

PART(S)

STEP	PART NAME	QUANTITY
Filling Step 5	Transfer case drain plug washer	1

DRAINING

NOTE:

Some variation in the illustrations may occur, but the essential information is always correct.

transmissionmanuals.com

1. **WARNING:**

   Do not work on or under a vehicle supported only by a jack. Always support the vehicle on safety stands.

   Raise and support the vehicle.

2. Position a container to collect the fluid.

3. **CAUTION:**

   Make sure that the area around the component is clean and free of foreign material.

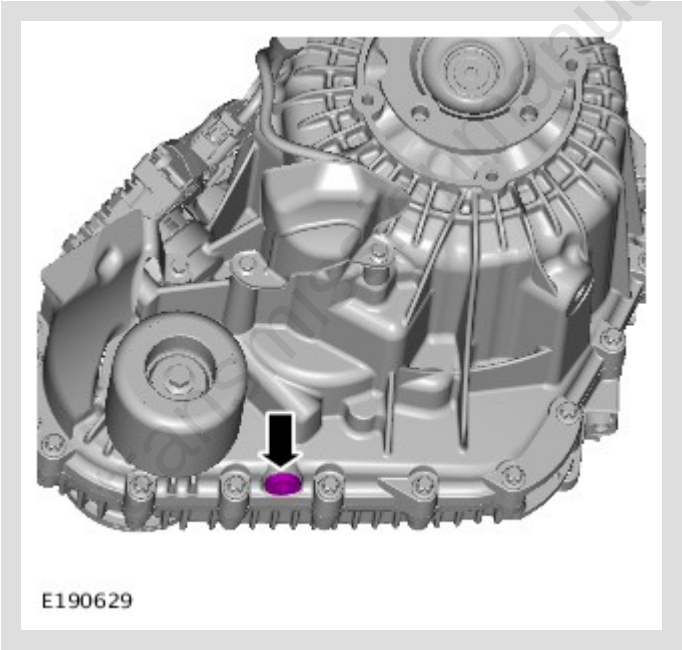

   Remove and discard the sealing washer.

4. Allow the fluid to drain.

FILLING

1.

NOTE:

Make sure that all the component mating faces are clean.

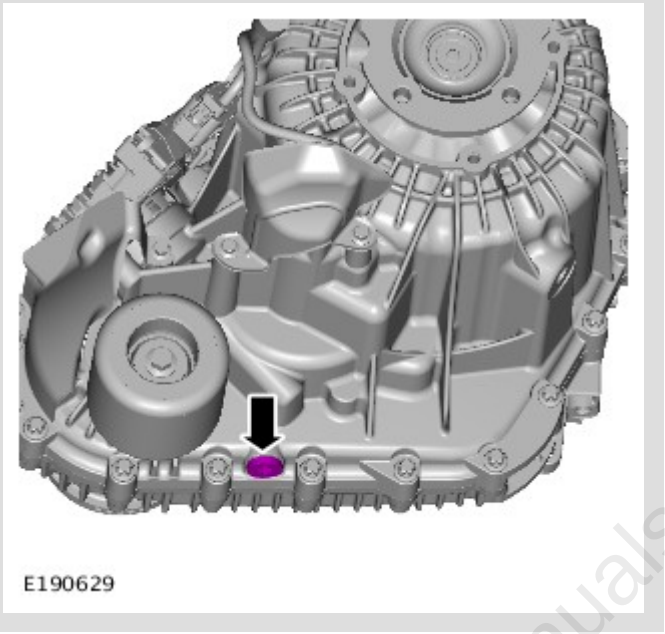

Install a new sealing washer.

Torque: **28 Nm**

2.

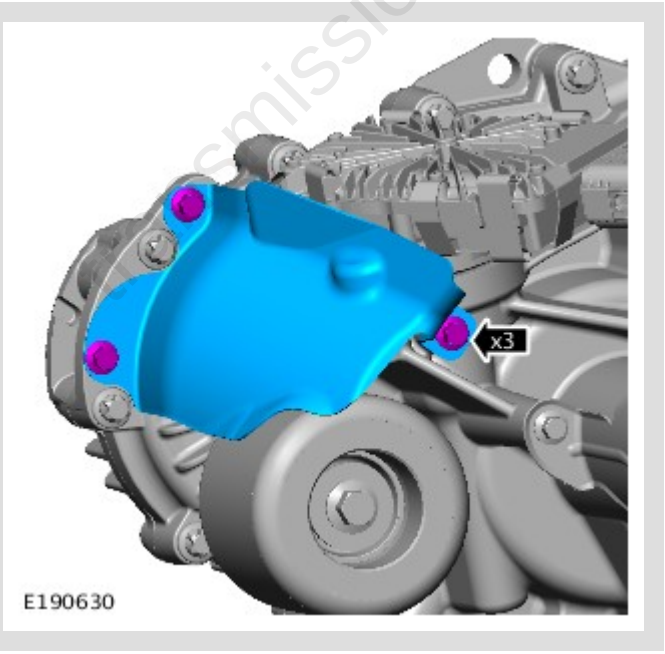

transmissionmanuals.com

3.

CAUTION:

Make sure that the area around the component is clean and free of foreign material.

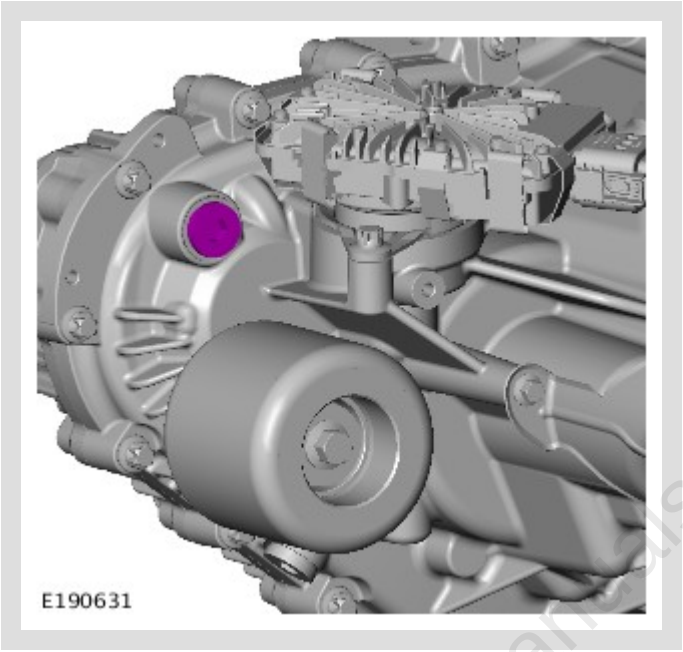

Remove and discard the sealing washer.

4. Refill transfer case with the recommended fluid, until the fluid is level with bottom of filler/level plug hole.
Refer to: Specifications (308-07C, Specifications).

transmissionmanuals.com

5.

NOTE:

Make sure that all the component mating faces are clean.

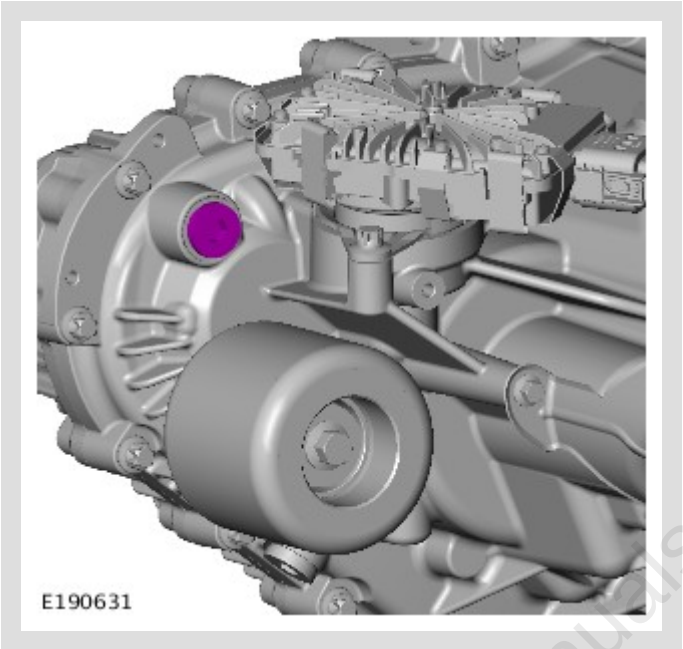

Install a new sealing washer.
Renew Part: *Transfer case drain plug washer* *Quantity:* *1* .
Torque: **28 Nm**

6.

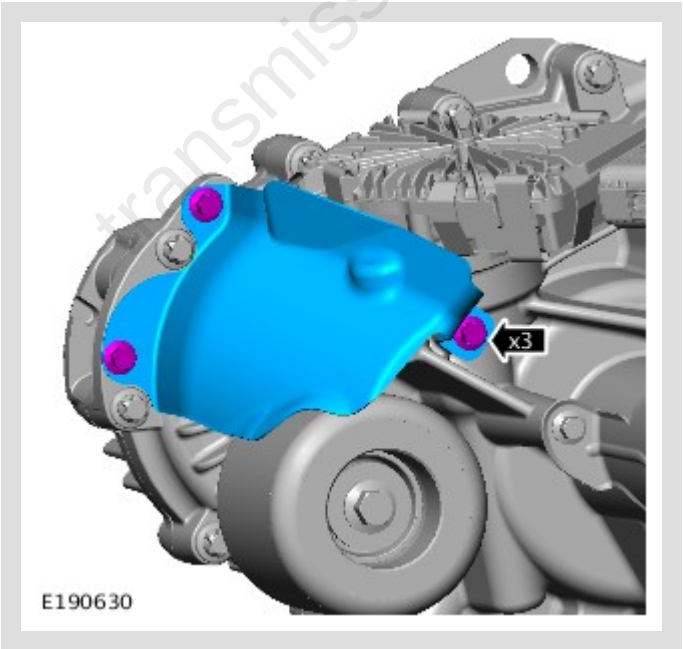

Torque: **8 Nm**

7. Using the diagnostic tool, re-calibrate the transfer case.
General Equipment: Land Rover diagnostic equipment

transmissionmanuals.com

transmissionmanuals.com

PUBLISHED: 25-AUG-2017
2022.0 DEFENDER (LE), 308-07

TRANSFER CASE - [+] SINGLE SPEED TRANSFER CASE

TRANSFER CASE FRONT OUTPUT SEAL

(G2003498)

REMOVAL AND INSTALLATION

SPECIAL TOOL(S)



205-818

Installer, Seal



308-620

Installer, Seal

transmissionmanuals.com



308-636

Installer



JLR-308-926

Support Tool, Transfer Case



JLR-308-933

Remover, Transfer Case Flange

transmissionmanuals.com

PART(S)

STEP	PART NAME	QUANTITY
Installation Step 2	Transfer case front output seal and bearing kit	1

REMOVAL

NOTE:

- Some variation in the illustrations may occur, but the essential information is always correct.
- Some components shown removed for clarity.

1. Disconnect the battery ground cable.
   Refer to: Specifications (414-00 Battery and Charging System - General Information, Specifications).

2. **WARNING:**

   Make sure to support the vehicle with axle stands.

   Raise and support the vehicle.

3. Drain the transfer case fluid.
   Refer to: Transfer Case Draining and Filling (308-07 Transfer Case - [+] Twin Speed Transfer Case, General Procedures).

4. Remove the transfer case.
   Refer to: Transfer Case - TDV6 3.0L Diesel - Gen 2/TDV6 3.0L Diesel /TDV6 3.0L Diesel - Gen 1.5 (308-07 Transfer Case - [+] Single Speed Transfer Case, Removal).
   Refer to: Transfer Case - V6 S/C 3.0L Petrol (308-07 Transfer Case - [+] Single Speed Transfer Case, Removal).
   Refer to: Transfer Case - INGENIUM I4 2.0L Diesel (308-07 Transfer Case - [+] Single Speed Transfer Case, Removal).

transmissionmanuals.com

5.

CAUTION:

Make sure the bolt holes are clean and free of foreign materials.



Remove the 17 transfer box case bolts.

transmissionmanuals.com

6.

WARNING:

Eye protection must be worn.

CAUTION:

Care must be taken to avoid damage to the mating surfaces.

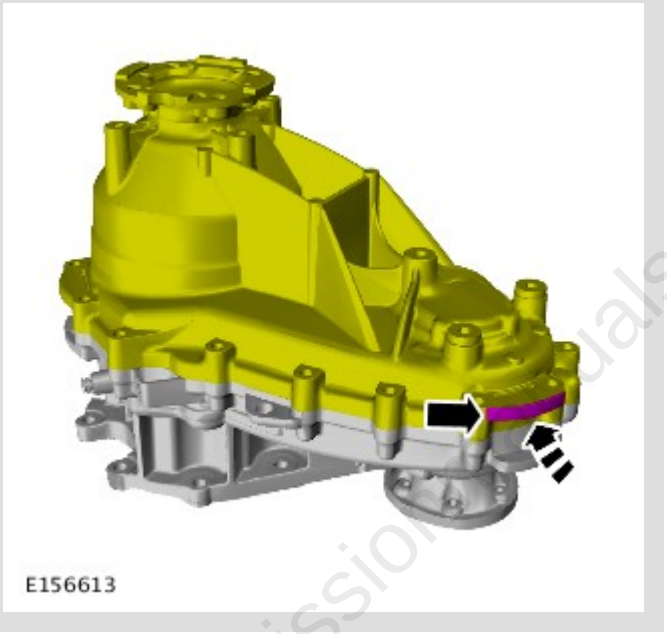

Using a soft faced mallet, release the rear casing.

7.

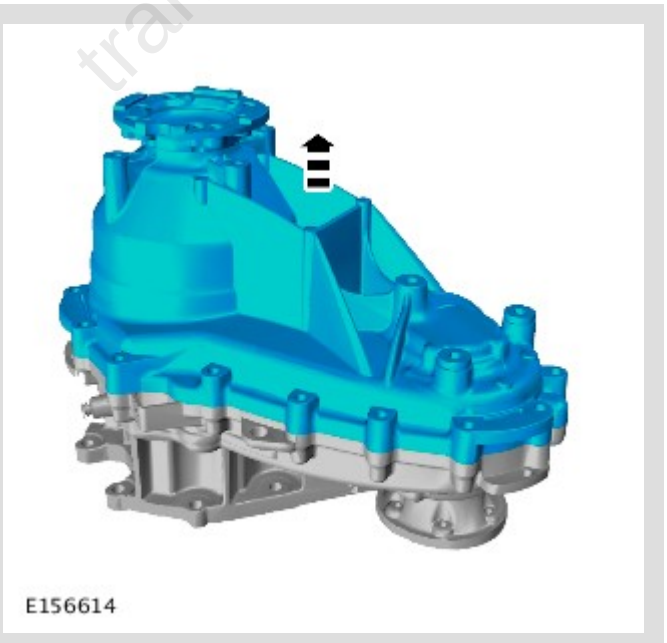

Split the transfer box case.

transmissionmanuals.com

8.

CAUTION:

Make sure that the mating faces are clean and free of foreign material.

Remove the sealant from the transfer case mating faces.

9.

CAUTION:

Note the installed position of the component prior to removal.



transmissionmanuals.com

10.

CAUTION:

Note the installed position of the component prior to removal.

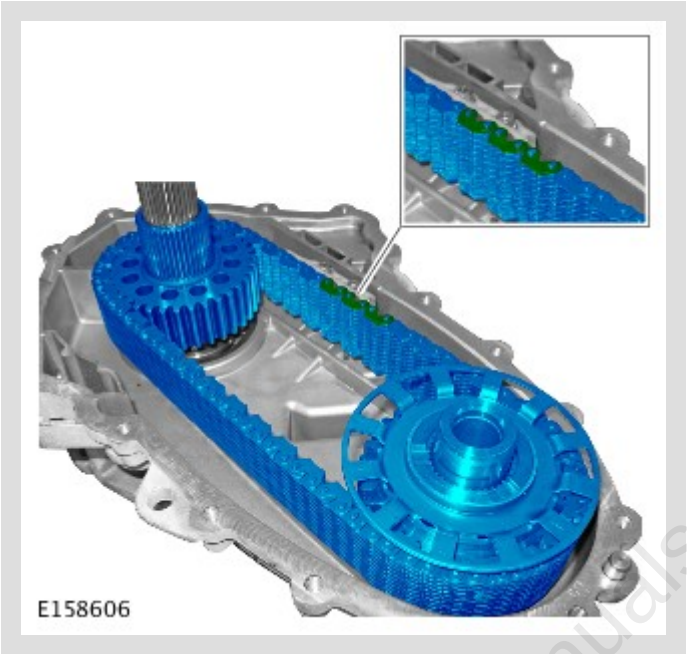

Remove the transfer case chain assembly.

transmissionmanuals.com

11.

CAUTION:

Note the installed position of the component prior to removal.

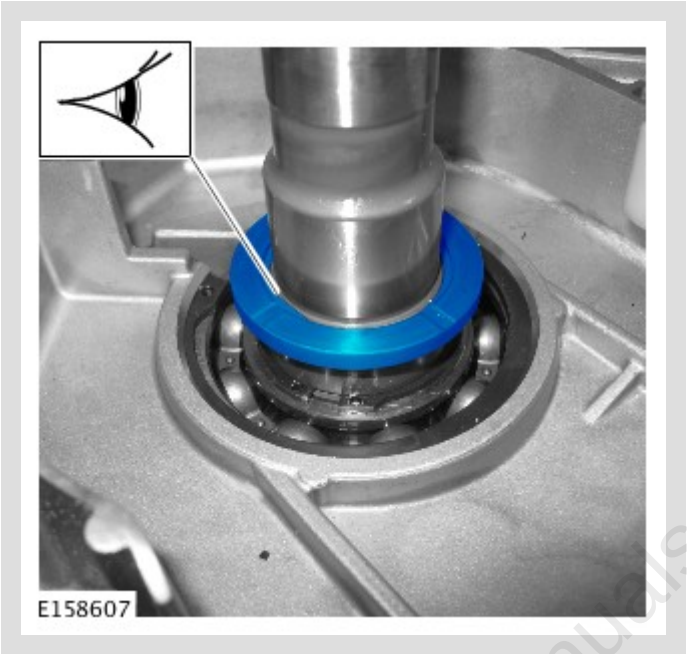

Remove the spacer.

transmissionmanuals.com

12.

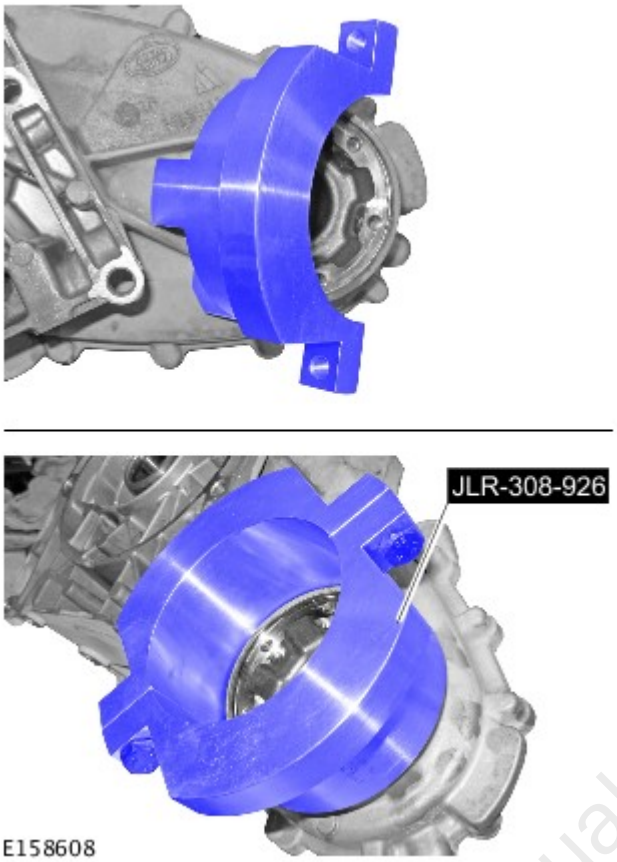

Install the special tool.

Special Tool(s): JLR-308-926

transmissionmanuals.com

13.

CAUTION:

Make sure that the special tool is correctly located. This will make sure that the snap ring is fully compressed during the next step.



Release the snap ring using the special tool.
Special Tool(s): JLR-308-933

transmissionmanuals.com

14.

CAUTION:

- Do not use excessive force whilst removing the flange assembly.
- Discard the snap ring.



Remove the transfer case front output shaft.

15.



Remove and discard the seal.

Transmissionmanuals.com

16.



Remove the bearing.

INSTALLATION

1.



Position the special tool as shown, to support the transfer case during the next step.
Special Tool(s): JLR-308-926

transmissionmanuals.com

2.

CAUTION:

- The chamfer on the bearing inner track must face the seal.
- The transfer case must be supported by the special tool on a flat surface during this step.

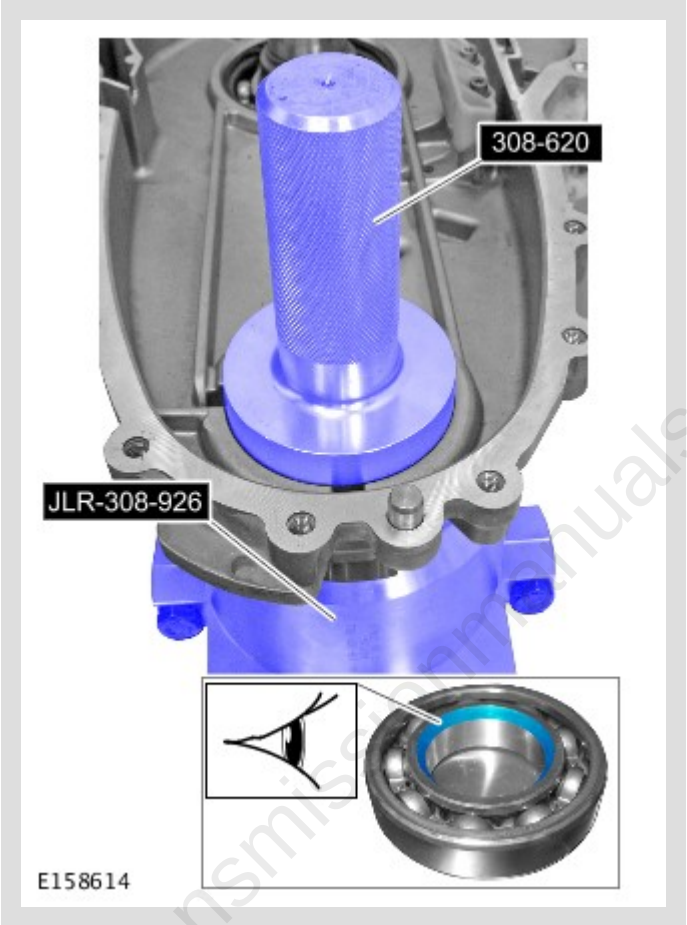

transmissionmanuals.com

- Install the bearing.
  Special Tool(s): 308-620
- *Renew Part:* *Transfer case front output seal and bearing kit* *Quantity:* *1* .

3.



- Install the seal.
  Special Tool(s): 308-636

transmissionmanuals.com

4.



- Centralise the snap ring in the snap ring groove before installing the output flange.
- Extreme care is necessary to make sure the snap ring enters the bearing squarely.
- Install a new snap ring.
- Using the special tool and with assistance, install the drive flange.
  Special Tool(s): 205-818

transmissionmanuals.com

5.

NOTE:

Make sure that the component is installed to the noted removal position.



Install the spacer.

transmissionmanuals.com

6.

CAUTION:

The dark links in the chain face up as shown.

NOTE:

Make sure that the components are installed to the noted removal position.

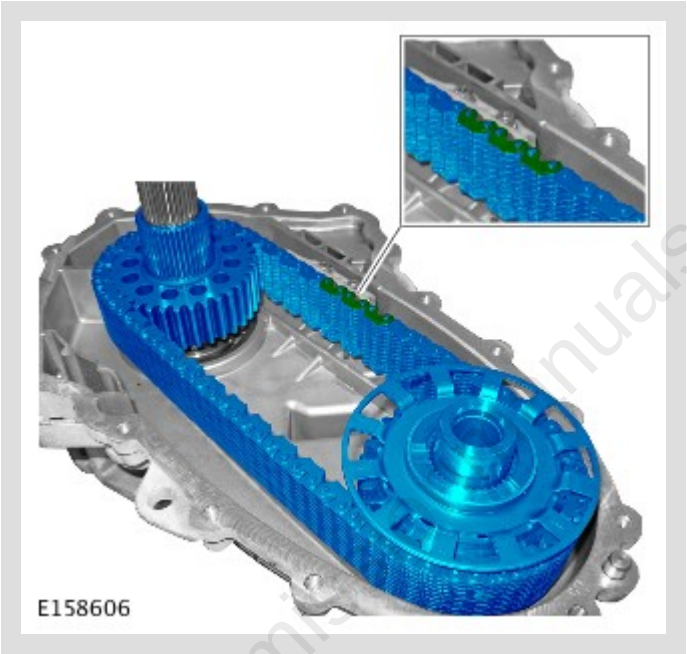

Install the transfer case chain assembly.

transmissionmanuals.com

7.

NOTE:

Make sure that the component is installed to the noted removal position.

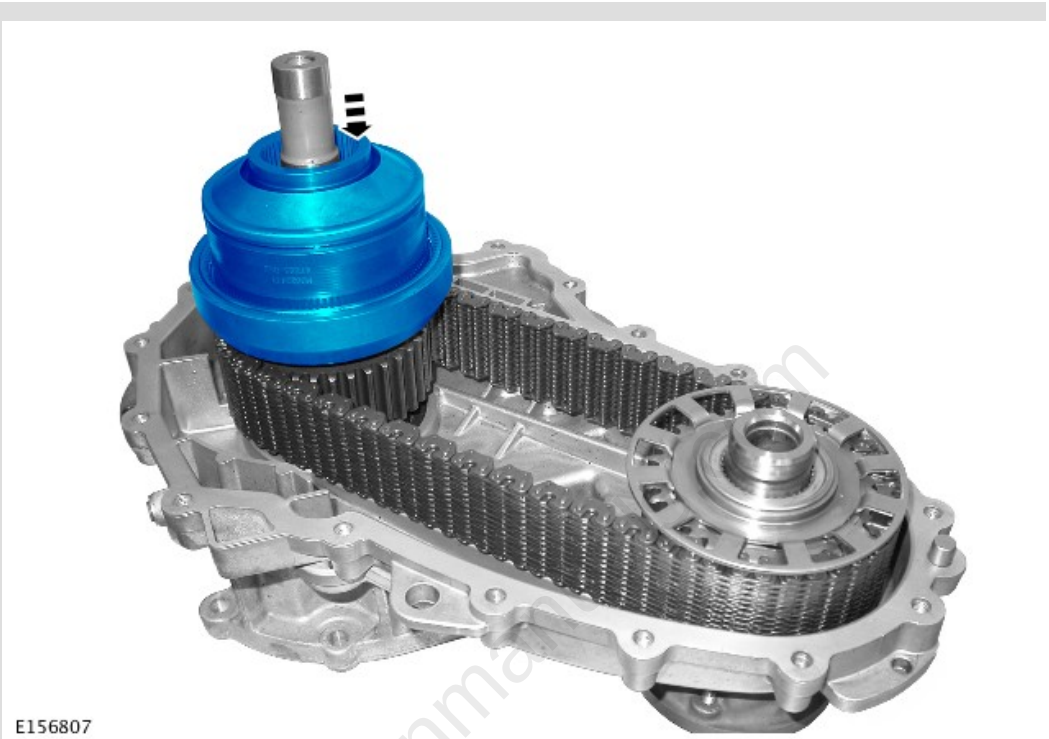

E156807

transmissionmanuals.com

8.

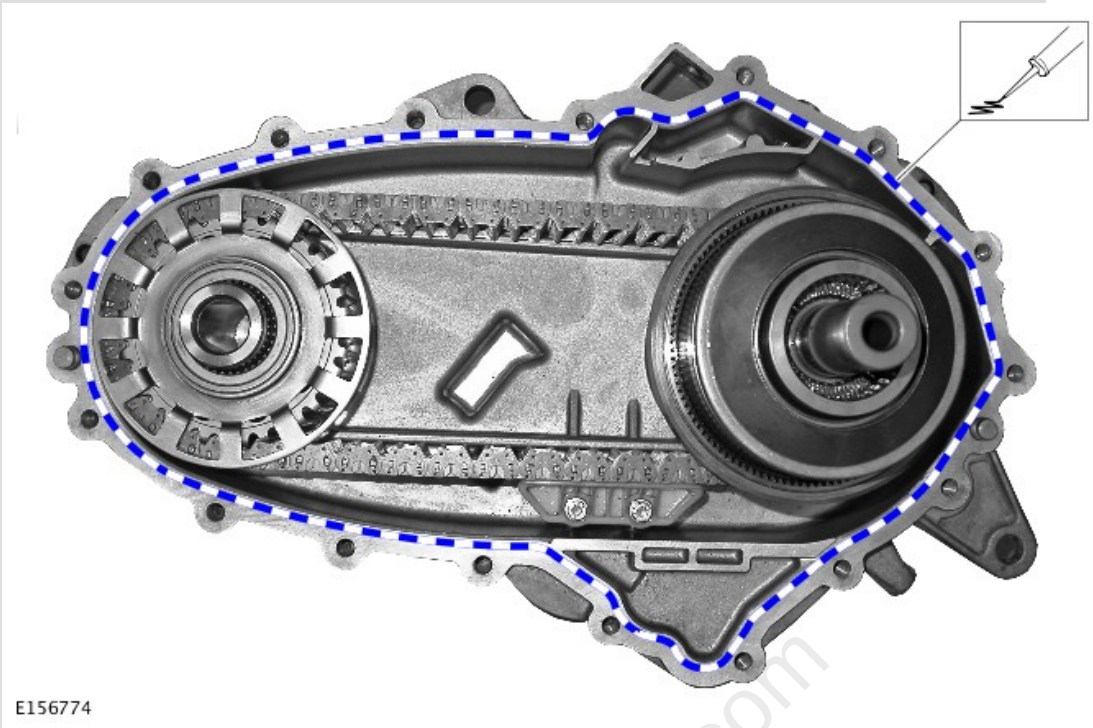

Apply a 2 mm bead of sealant to one surface of the transfer case mating face, as shown.
Refer to: Specifications (308-07 Four-Wheel Drive Systems, Specifications).

9.

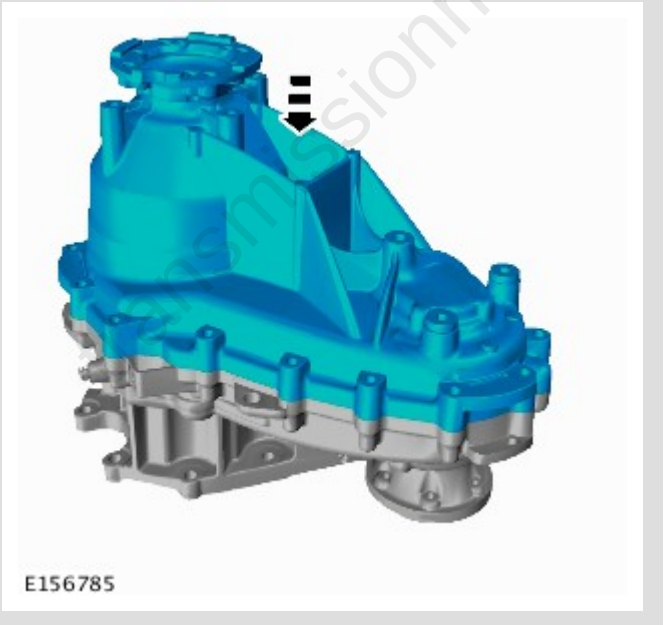

transmissionmanuals.com

10.

CAUTION:

Only tighten the bolts finger-tight at this stage.

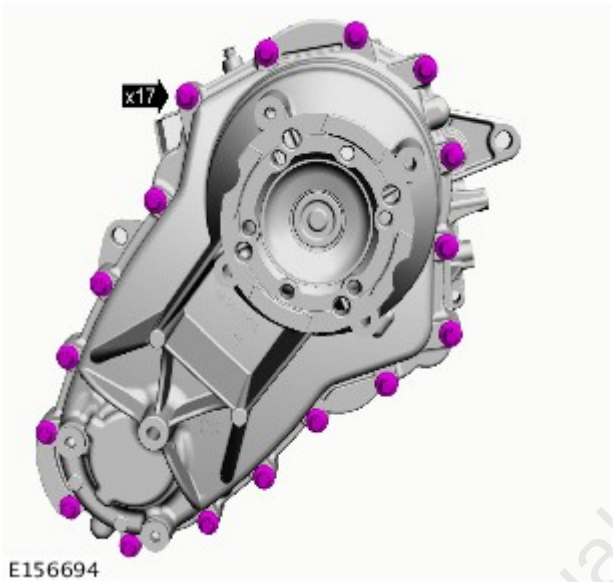

Install the 17 transfer box case bolts.

11.



Torque: **10 Nm**

transmissionmanuals.com

12.

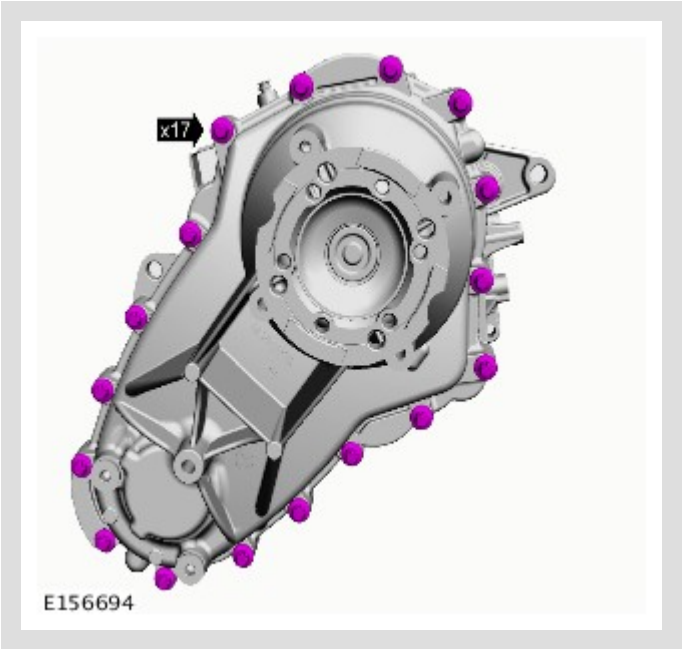

Torque: **35 Nm**

13. Install the transfer case.
Refer to: Transfer Case - TDV6 3.0L Diesel - Gen 2/TDV6 3.0L Diesel /TDV6 3.0L Diesel - Gen 1.5 (308-07 Transfer Case - [+] Single Speed Transfer Case, Installation).
Refer to: Transfer Case - V6 S/C 3.0L Petrol (308-07 Transfer Case - [+] Single Speed Transfer Case, Installation).
Refer to: Transfer Case - INGENIUM I4 2.0L Diesel (308-07 Transfer Case - [+] Single Speed Transfer Case, Installation).

14. Fill the transfer case with the recommended fluid.
Refer to: Transfer Case Draining and Filling (308-07 Transfer Case - [+] Twin Speed Transfer Case, General Procedures).

15. Connect the battery ground cable.
Refer to: Specifications (414-00 Battery and Charging System - General Information, Specifications).

transmissionmanuals.com

PUBLISHED: 28-APR-2017
2022.0 DEFENDER (LE), 308-07

TRANSFER CASE - [+] TWIN SPEED TRANSFER CASE

TRANSFER CASE FRONT OUTPUT SEAL

(G2006982)

REMOVAL AND INSTALLATION

SPECIAL TOOL(S)



205-818

Installer, Seal



308-636

Installer

transmissionmanuals.com



JLR-308-926

Support Tool, Transfer Case

PART(S)

STEP	PART NAME	QUANTITY
Installation Step 1	Transfer case front output seal and bearing kit	1
Installation Step 3	Circlip	1

REMOVAL

NOTE:

- Some variation in the illustrations may occur, but the essential information is always correct.
- Some components shown removed for clarity.

1. Disconnect the battery ground cable.
   Refer to: Specifications (414-00 Battery and Charging System - General Information, Specifications).

transmissionmanuals.com

2.

WARNING:

Make sure to support the vehicle with axle stands.

Raise and support the vehicle.

3. Remove the transfer case.
Refer to: Transfer Case - V6 S/C 3.0L Petrol (308-07 Transfer Case - Vehicles With: Twin Speed Transfer Case, Removal).
Refer to: Transfer Case - TDV6 3.0L Diesel (308-07 Transfer Case - Vehicles With: Twin Speed Transfer Case, Removal).
Refer to: Transfer Case - INGENIUM I4 2.0L Diesel (308-07 Transfer Case - Vehicles With: Twin Speed Transfer Case, Removal).

4.

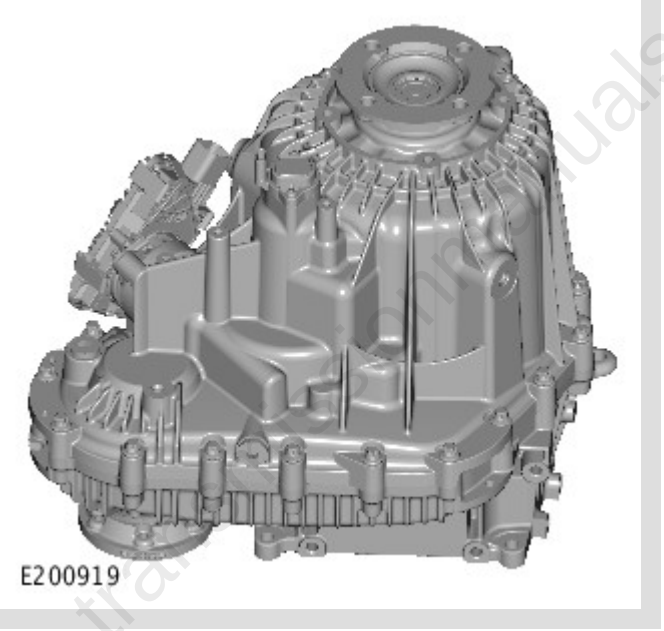

With assistance, secure the transfer case with its transmission mating face down on a flat surface as shown in the illustration.

5.

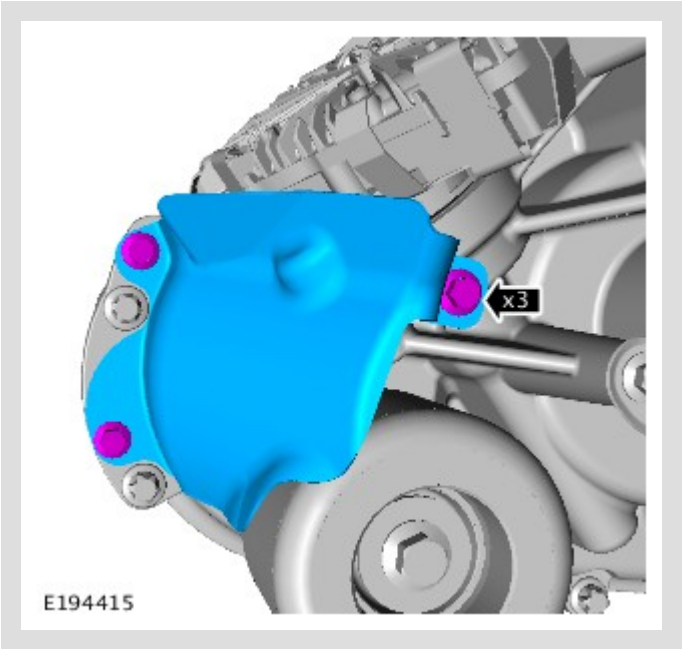

If equipped, remove the heat shield.

6.

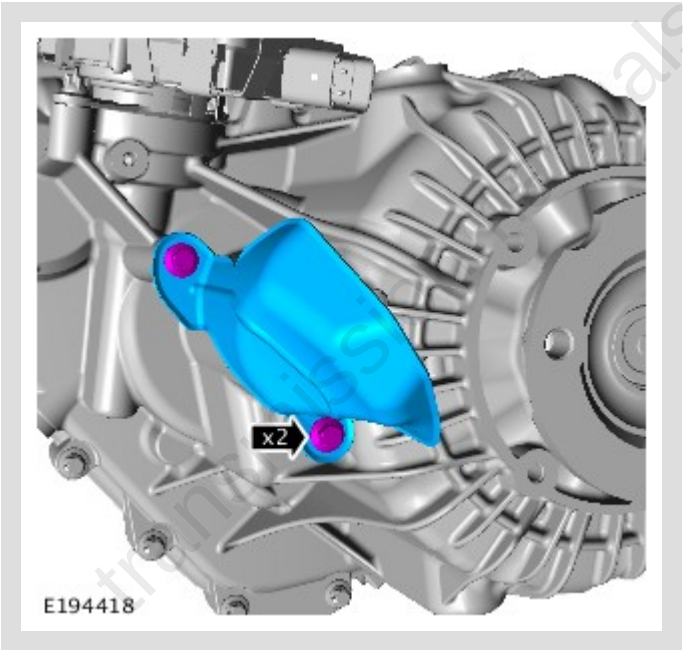

If equipped, remove the heat shield.

7.

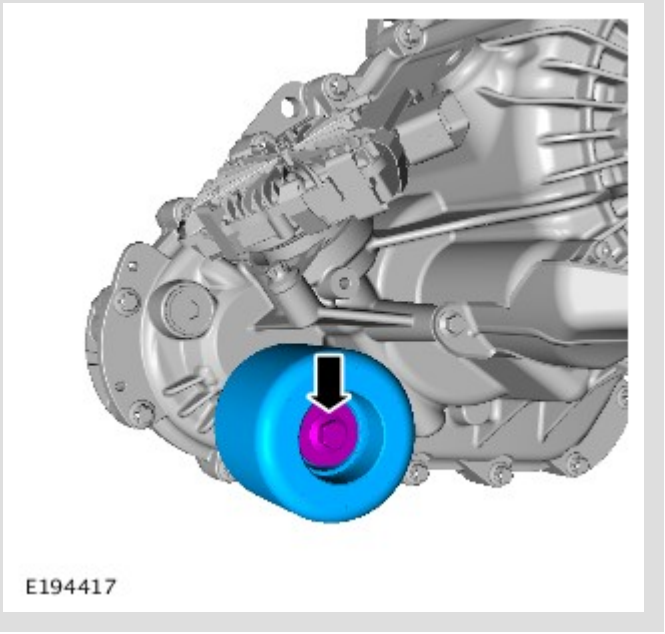

Remove the damper.

8.

CAUTION:

Make sure the bolt holes are clean and free of swarf.

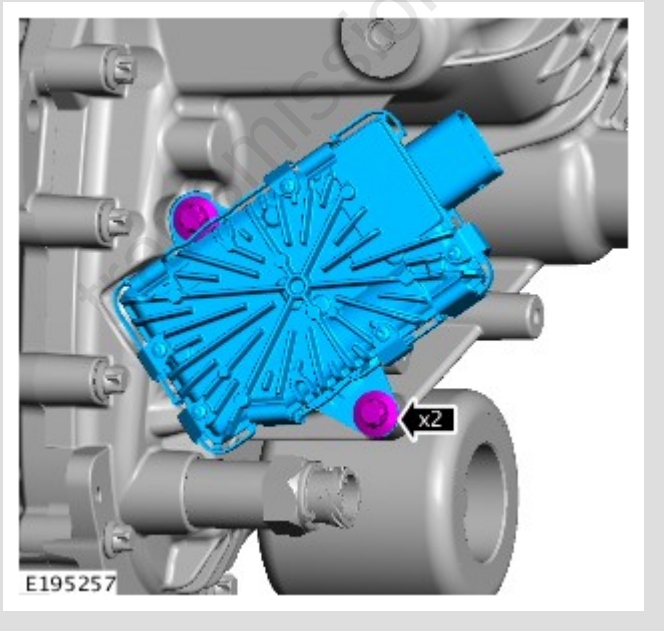

Remove the motor.

transmissionmanuals.com

9.

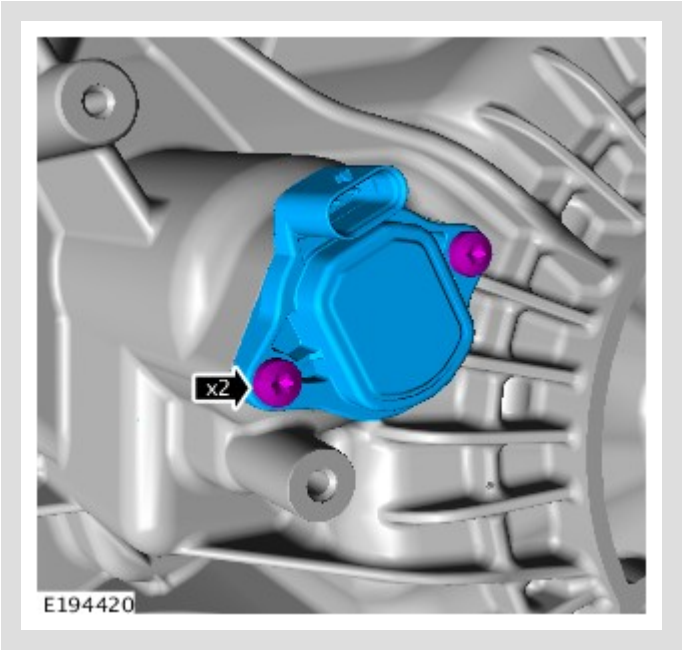

Remove the sensor.

10.

CAUTION:

Make sure the bolt holes are clean and free of swarf.

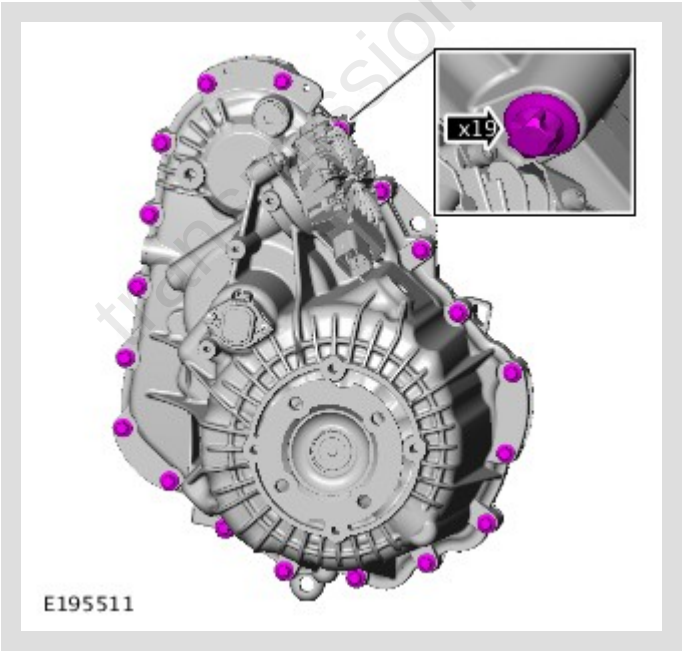

Remove the 19 transfer box case bolts.

transmissionmanuals.com

11.

CAUTION:

Care must be taken when turning the transfer case over. The transfer case halves must not be allowed to separate.

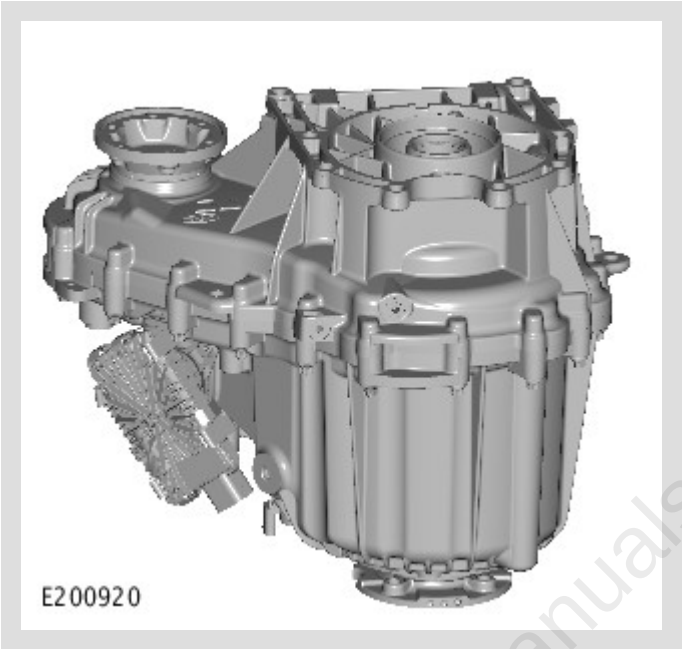

With assistance, release the transfer case and secure with the rear face of the transfer case facing down on a flat surface as shown in the illustration.

transmissionmanuals.com

12.

CAUTION:

Care must be taken to avoid damage to the mating surfaces.



Using a soft faced mallet, release the front casing.

13. Remove the sealant from the transfer case mating faces.

transmissionmanuals.com

14.

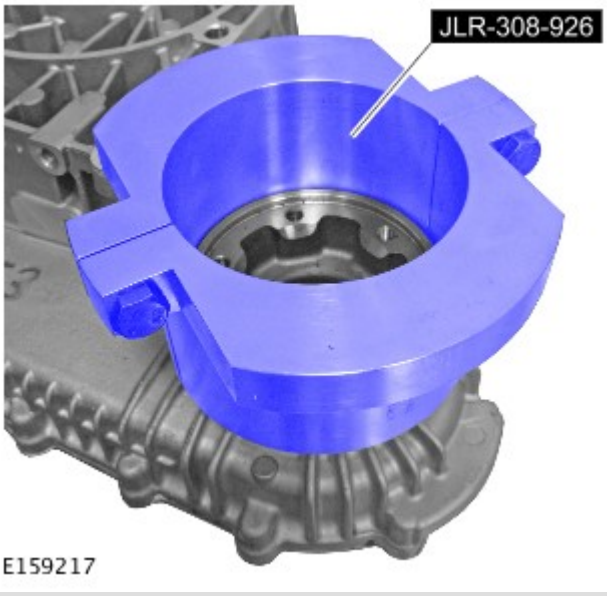

Using the special tool, support the output shaft flange.
Special Tool(s): JLR-308-926

15.

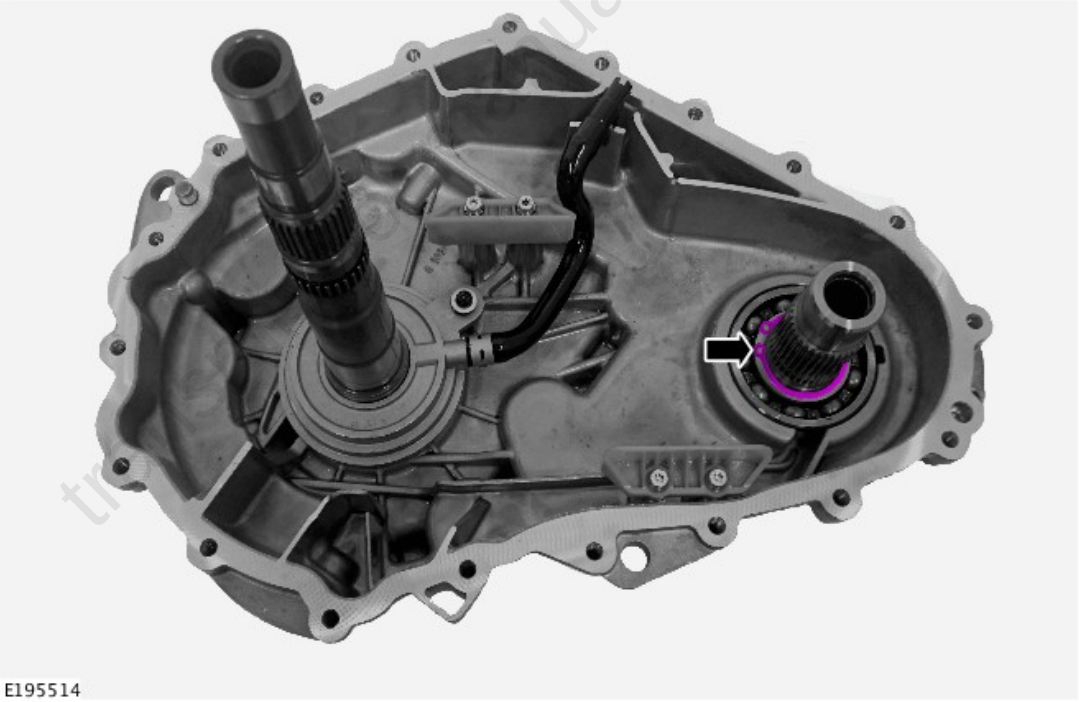

Remove and discard the circlip.

16.

CAUTION:

Do not use excessive force whilst removing the flange assembly.



Remove the front output shaft and flange assembly.

17.



Using a suitable tool, remove and discard the oil seal.

INSTALLATION

transmissionmanuals.com

1.

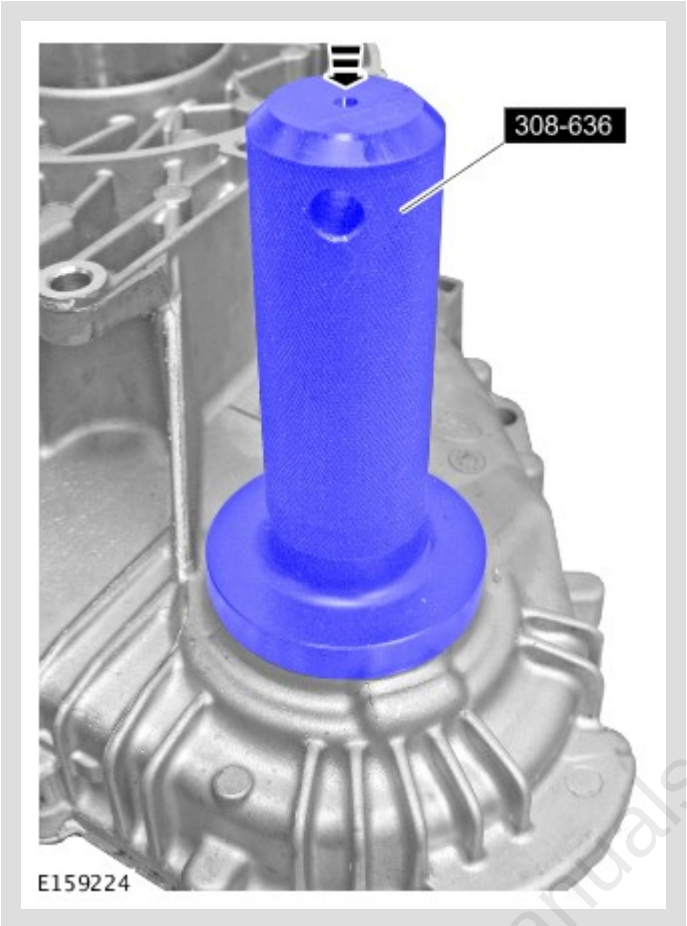

Install the seal.

Special Tool(s): 308-636

Renew Part: *Transfer case front output seal and bearing kit* *Quantity:* *1* .

transmissionmanuals.com

2.

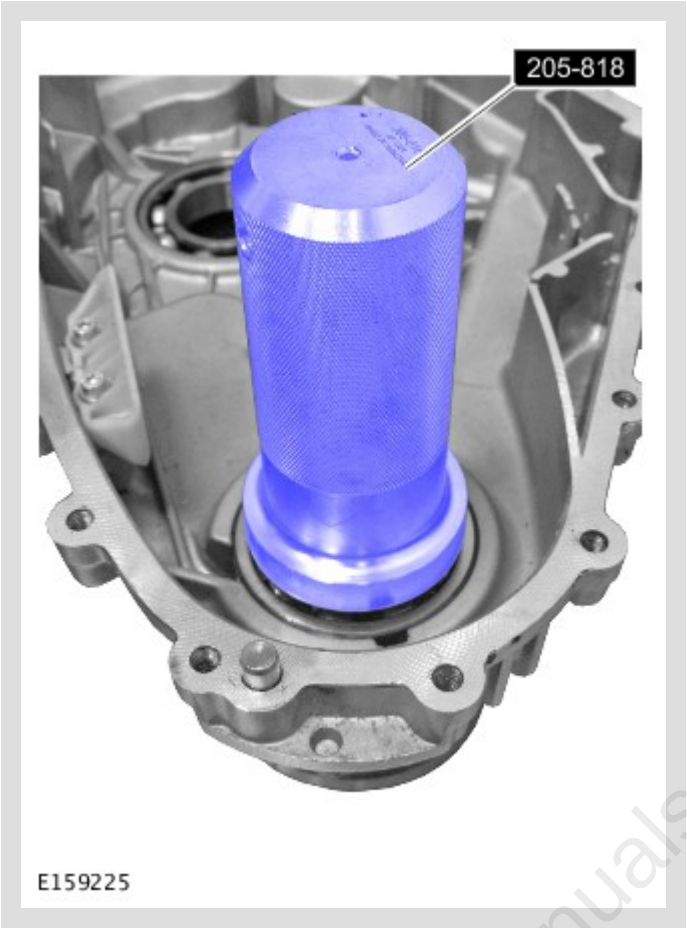

Using the special tool and with assistance, install the drive flange.
Special Tool(s): 205-818

transmissionmanuals.com

3.

NOTE:

Check that the circlip is fully engaged.



Install a new circlip.

Renew Part: Circlip Quantity: 1 .

transmissionmanuals

4.

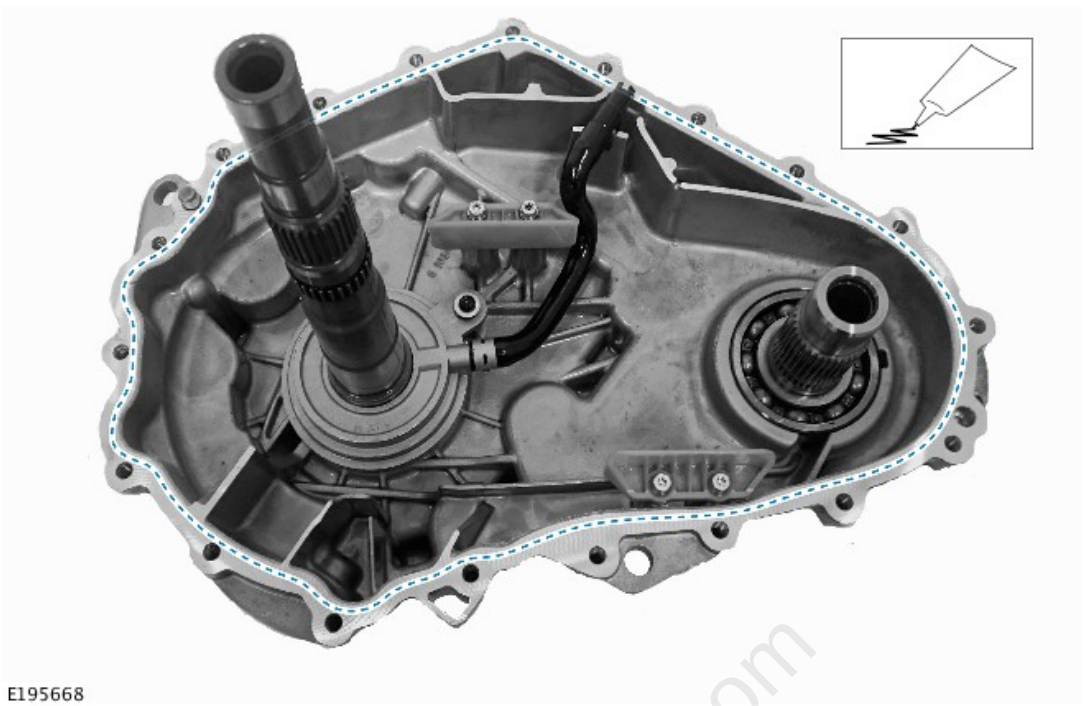

Apply a 2 mm bead of sealant to one surface of the transfer case mating face, as shown.
Refer to: Specifications (308-07 Transfer Case - Vehicles With: Twin Speed Transfer Case, Specifications).

transmissionmanuals.com

5.

CAUTION:

- Make sure that the input shaft spacer is located correctly.
- The input shaft and fluid pump assembly must be supported and held in place by hand, until it is located securely into the clutch assembly.

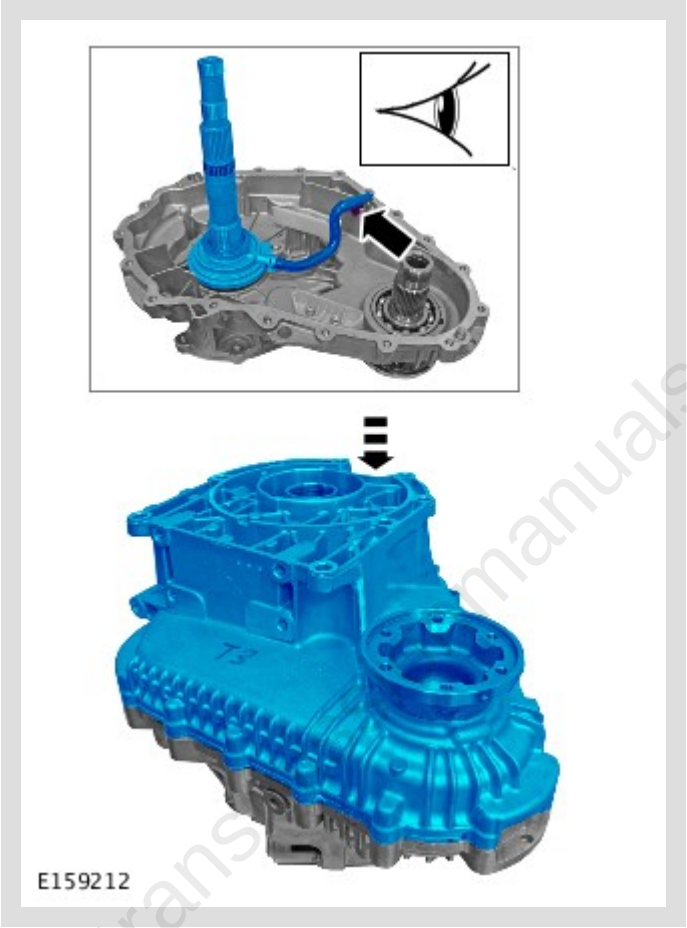

Install the front half of the transfer case.

transmissionmanuals.com

6.

CAUTION:

Care must be taken when turning the transfer case over. The transfer case halves must not be allowed to separate.

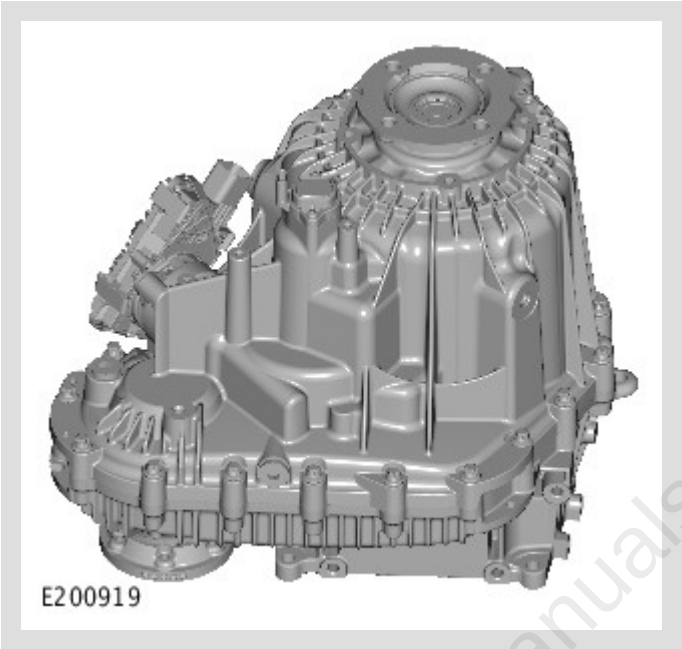

With assistance, release the transfer case and secure with its transmission mating face down on a flat surface.

transmissionmanuals.com

7.

CAUTION:

Only tighten the bolts finger-tight at this stage.

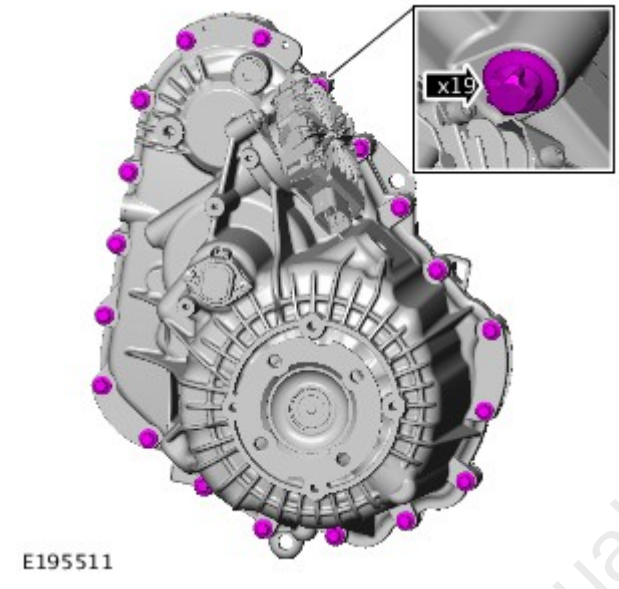

Install the 19 transfer box case bolts.

8.

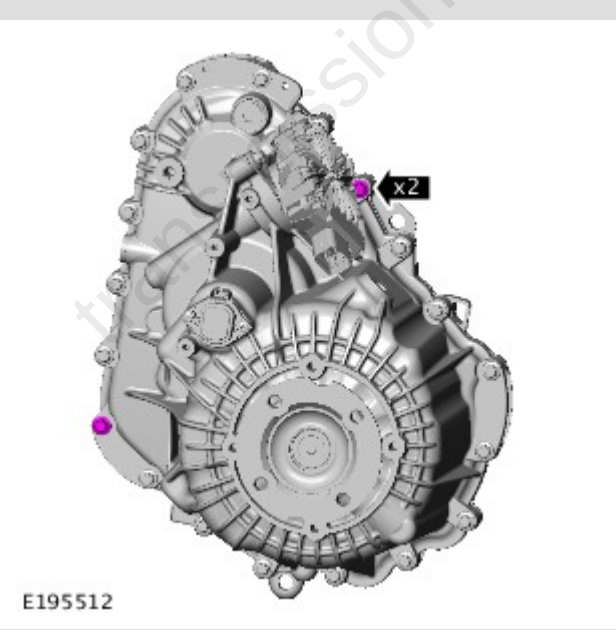

Torque: **10 Nm**

transmissionmanuals.com

9.

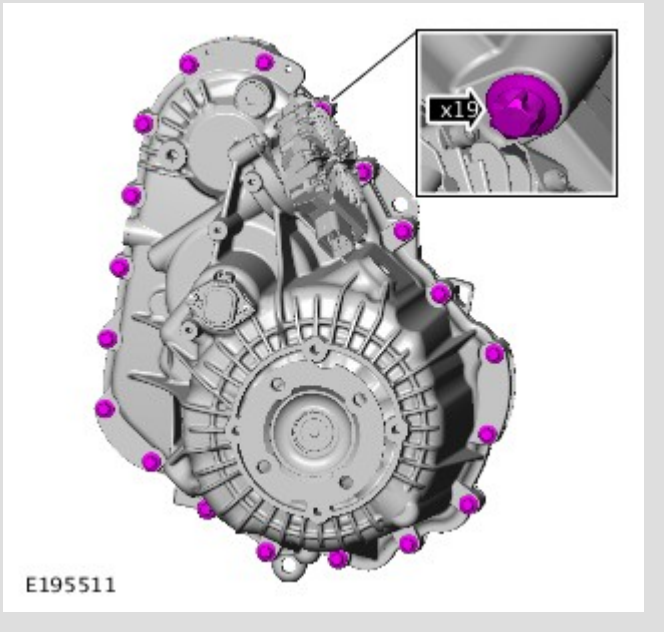

Fully tighten the 19 transfer box case bolts.

Torque: **35 Nm**

10.

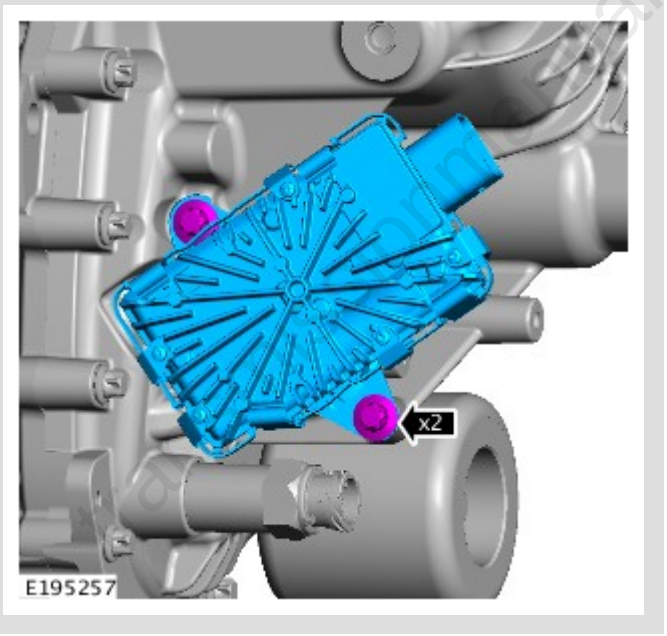

Install the motor.

Torque: **35 Nm**

11.

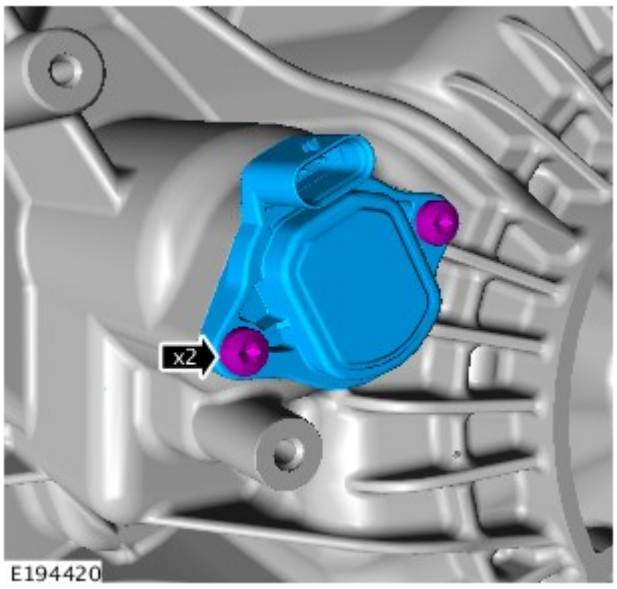

Install the sensor.

Torque: **5 Nm**

12.

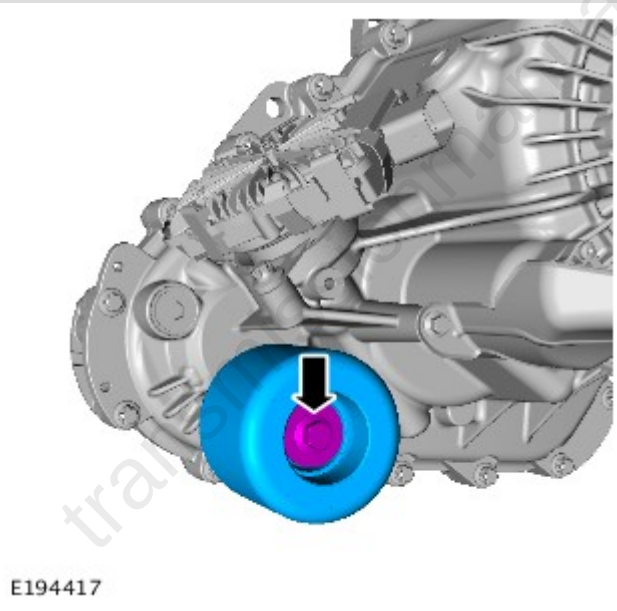

Install the damper.

Torque: **75 Nm**

transmissionmanuals.com

13.

NOTE:

This step is only required if previously removed.

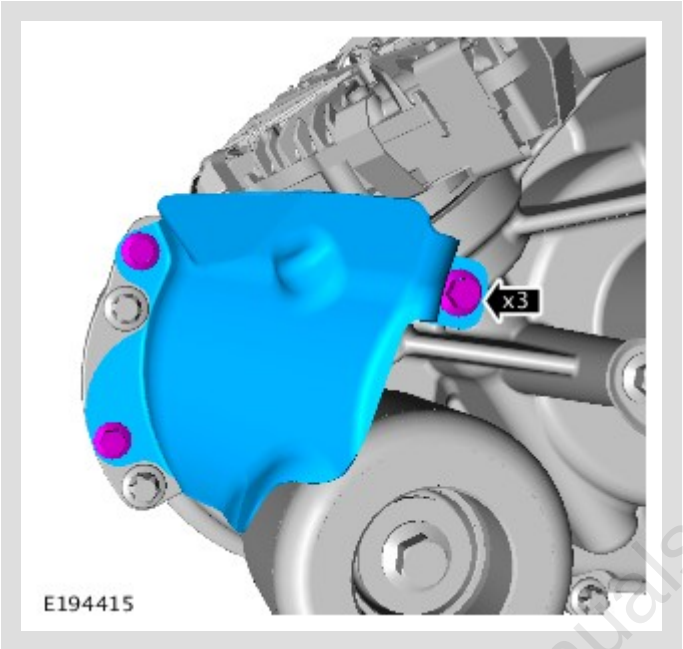

Install the heat shield.

Torque: **8 Nm**

transmissionmanuals.com

14.

NOTE:

This step is only required if previously removed.

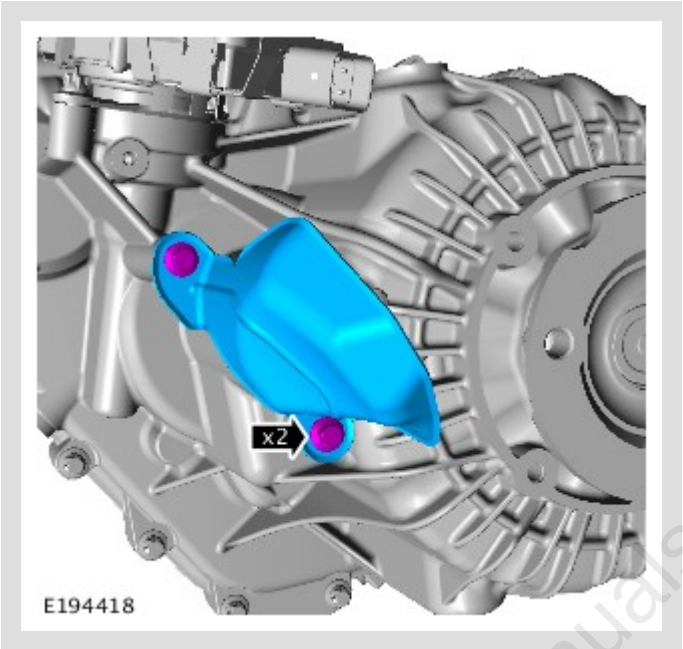

Install the heat shield.
Torque: **8 Nm**

15. Install the transfer case.
Refer to: Transfer Case - V6 S/C 3.0L Petrol (308-07 Transfer Case - Vehicles With: Twin Speed Transfer Case, Installation).
Refer to: Transfer Case - TDV6 3.0L Diesel (308-07 Transfer Case - Vehicles With: Twin Speed Transfer Case, Installation).
Refer to: Transfer Case - INGENIUM I4 2.0L Diesel (308-07 Transfer Case - Vehicles With: Twin Speed Transfer Case, Installation).

16. Connect the battery ground cable.
Refer to: Specifications (414-00 Battery and Charging System - General Information, Specifications).

17.

- Connect the Land Rover approved diagnostic equipment.
- Start the diagnostic service function "transfer case-transfer case control module replacement".
- Start the service function "transfer case-absolute position sensor replacement".
- Clear any Diagnostic Trouble Codes (DTCs) after calibration and check for correct operation.

transmissionmanuals.com

transmissionmanuals.com

PUBLISHED: 21-NOV-2016
2022.0 DEFENDER (LE), 308-07

TRANSFER CASE - [+] SINGLE SPEED TRANSFER CASE

TRANSFER CASE FRONT OUTPUT SHAFT BEARING (G1947974)

REMOVAL AND INSTALLATION

41.20.08	BEARING - FRONT OUTPUT SHAFT - RENEW	3000 CC, TDV6, SINGLE SPEED TRANSFER CASE, WITH PARTICULATE FILTER, WITH DIESEL EXHAUST FLUID	4.6	USED WITHINS	
41.20.08	BEARING - FRONT OUTPUT SHAFT - RENEW	3000 CC, TDV6, SINGLE SPEED TRANSFER CASE, WITH PARTICULATE FILTER, WITHOUT DIESEL EXHAUST FLUID	4.5	USED WITHINS	
41.20.08	BEARING - FRONT OUTPUT SHAFT - RENEW	3000 CC, TDV6, TWIN SPEED TRANSFER CASE, WITH PARTICULATE FILTER,	5.8	USED WITHINS	

transmissionmanuals.com

		WITH DIESEL EXHAUST FLUID			
41.20.08	BEARING - FRONT OUTPUT SHAFT - RENEW	3000 CC, TDV6, TWIN SPEED TRANSFER CASE, WITH PARTICULATE FILTER, WITHOUT DIESEL EXHAUST FLUID	5.7	USED WITHINS	

SPECIAL TOOL(S)



205-818

Installer, Seal



308-620

Installer, Seal

transmissionmanuals.com



308-636

Installer



JLR-308-926

Support Tool, Transfer Case

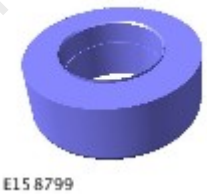

JLR-308-933

Remover, Transfer Case Flange

transmissionmanuals.com

PART(S)

STEP	PART NAME	QUANTITY
Installation Step 2	Transfer case front output shaft bearing	1

Installation Step 3	Transfer case front output shaft oil seal	1
Installation Step 4	Transfer case front output shaft snap ring	1

REMOVAL

NOTE:

- Some variation in the illustrations may occur, but the essential information is always correct.
- Some components shown removed for clarity.

1. Disconnect the battery ground cable.
   Refer to: Specifications (414-00, Specifications).

2. **WARNING:**

   Make sure to support the vehicle with axle stands.

   Raise and support the vehicle.

3. Drain the transfer case fluid.
   Refer to: Transfer Case Draining and Filling (308-07, General Procedures).

4. Remove the transfer case.
   Refer to: Transfer Case - TDV6 3.0L Diesel (308-07B, Removal).
   Refer to: Transfer Case - V6 S/C 3.0L Petrol (308-07B, Removal).
   Refer to: Transfer Case - INGENIUM I4 2.0L Diesel (308-07B, Removal).

transmissionmanuals.com

5.

CAUTION:

Make sure the bolt holes are clean and free of foreign materials.



Remove the 17 transfer box case bolts.

transmissionmanuals.com

6.

WARNING:

Eye protection must be worn.

CAUTION:

Care must be taken to avoid damage to the mating surfaces.

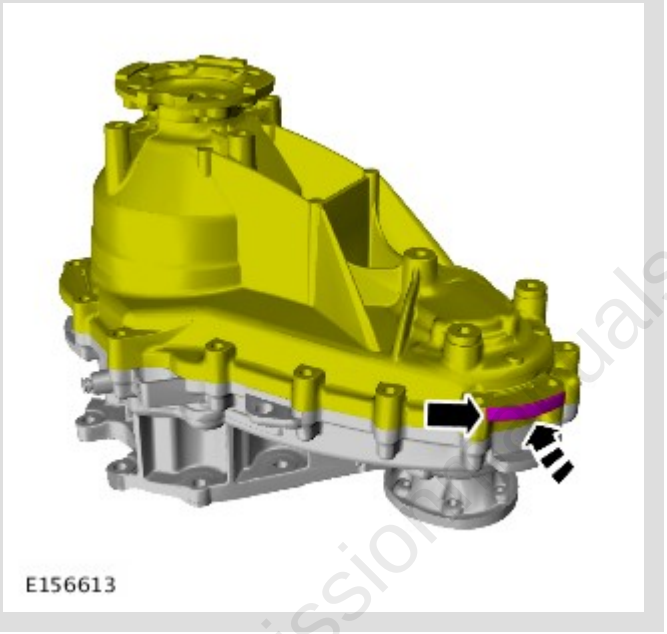

Using a soft faced mallet, release the rear casing.

7.

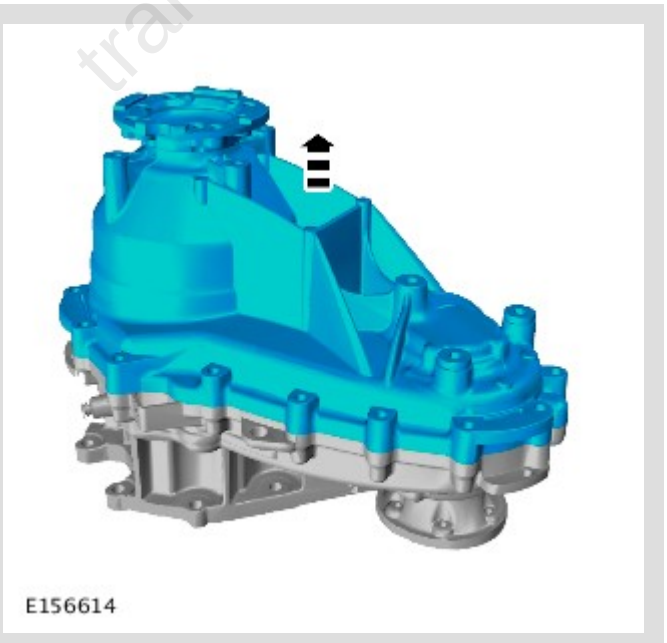

Split the transfer box case.

transmissionmanuals.com

8.

CAUTION:

Make sure that the mating faces are clean and free of foreign material.

Remove the sealant from the transfer case mating faces.

9.

CAUTION:

Note the installed position of the component prior to removal.



transmissionmanuals.com

10.

CAUTION:

Note the installed position of the component prior to removal.

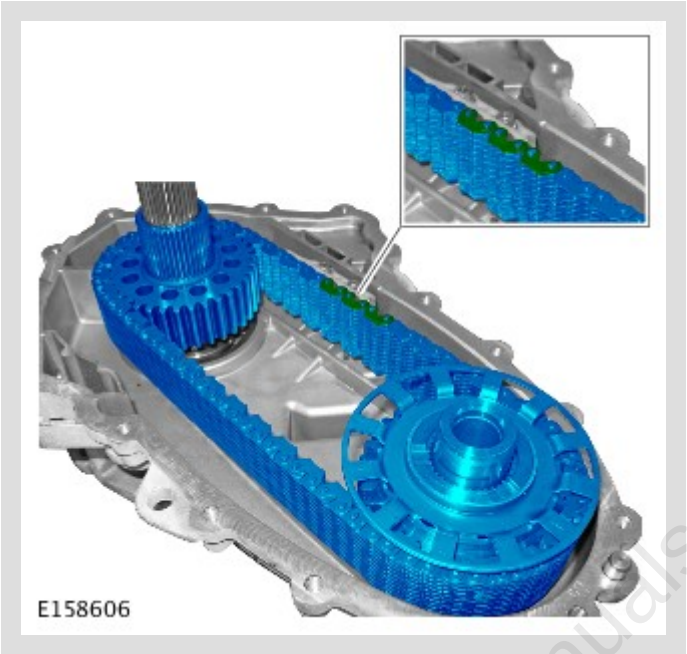

Remove the transfer case chain assembly.

transmissionmanuals.com

11.

CAUTION:

Note the installed position of the component prior to removal.

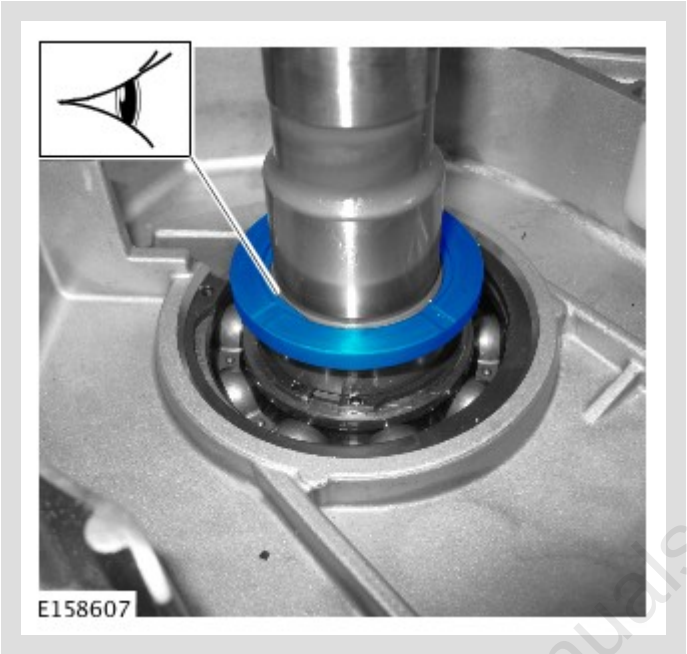

Remove the spacer.

transmissionmanuals.com

12.

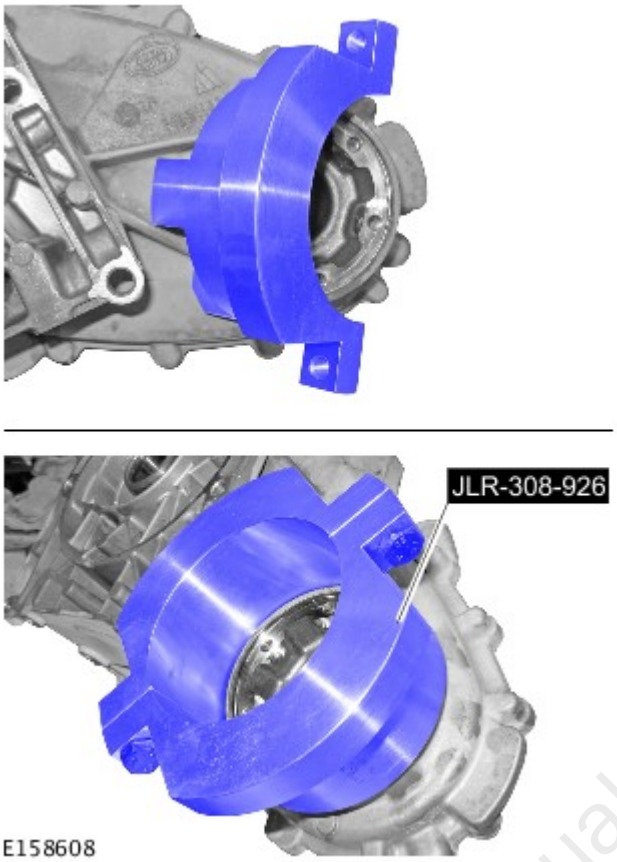

Install the special tool.

Special Tool(s): JLR-308-926

transmissionmanuals.com

13.

CAUTION:

Make sure that the special tool is correctly located. This will make sure that the snap ring is fully compressed during the next step.



Release the snap ring using the special tool.
Special Tool(s): JLR-308-933

transmissionmanuals.com

14.

CAUTION:

- Do not use excessive force whilst removing the flange assembly.
- Discard the snap ring.



Remove the transfer case front output shaft.
Special Tool(s): JLR-308-933

15.



Remove and discard the seal.

transmissionmanuals.com

16.



Remove the bearing.

INSTALLATION

1.



Position the special tool as shown, to support the transfer case during the next step.
Special Tool(s): JLR-308-926

transmissionmanuals.com

2.

CAUTION:

- The chamfer on the bearing inner track must face the seal.
- The transfer case must be supported by the special tool on a flat surface during this step.

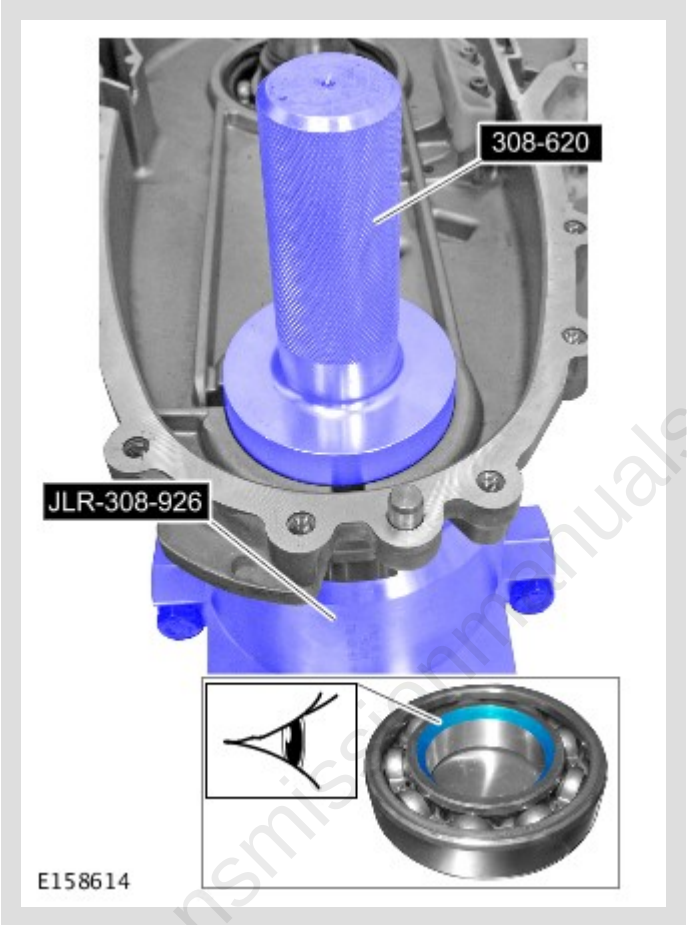

transmissionmanuals.com

- Install the bearing.
  Special Tool(s): 308-620
- *Renew Part: Transfer case front output shaft bearing Quantity: 1 .*

3.



- Install the seal.
  Special Tool(s): 308-636
- *Renew Part: Transfer case front output shaft oil seal Quantity: 1 .*

transmissionmanuals.com

4.



- Centralize the snap ring in the snap ring groove before installing the output flange.
- Extreme care is necessary to make sure the snap ring enters the bearing squarely.
- Install a new snap ring.
- Using the special tool and with assistance, install the drive flange. *Special Tool(s):* 205-818
- *Renew Part: Transfer case front output shaft snap ring Quantity: 1* .

transmissionmanuals.com

5.

NOTE:

Make sure that the component is installed to the noted removal position.



Install the spacer.

transmissionmanuals.com

6.

CAUTION:

The dark links in the chain face up as shown.

NOTE:

Make sure that the components are installed to the noted removal position.

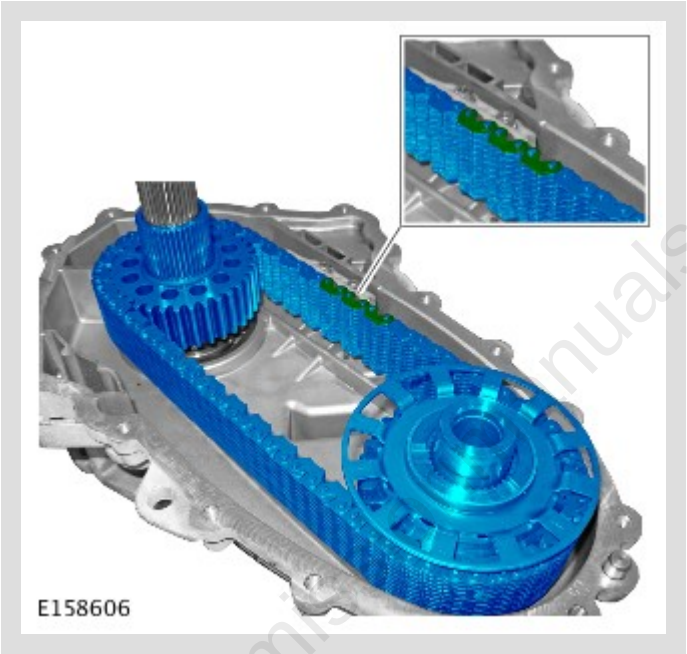

Install the transfer case chain assembly.

transmissionmanuals.com

7.

NOTE:

Make sure that the component is installed to the noted removal position.

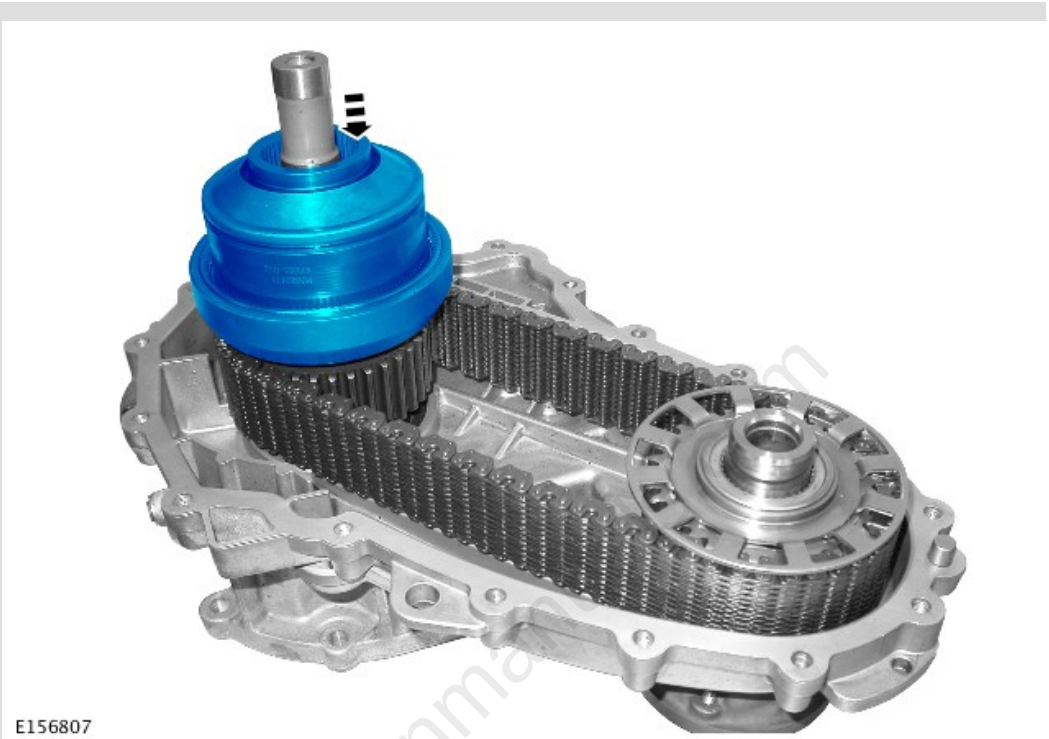

E156807

transmissionmanuals.com

8.

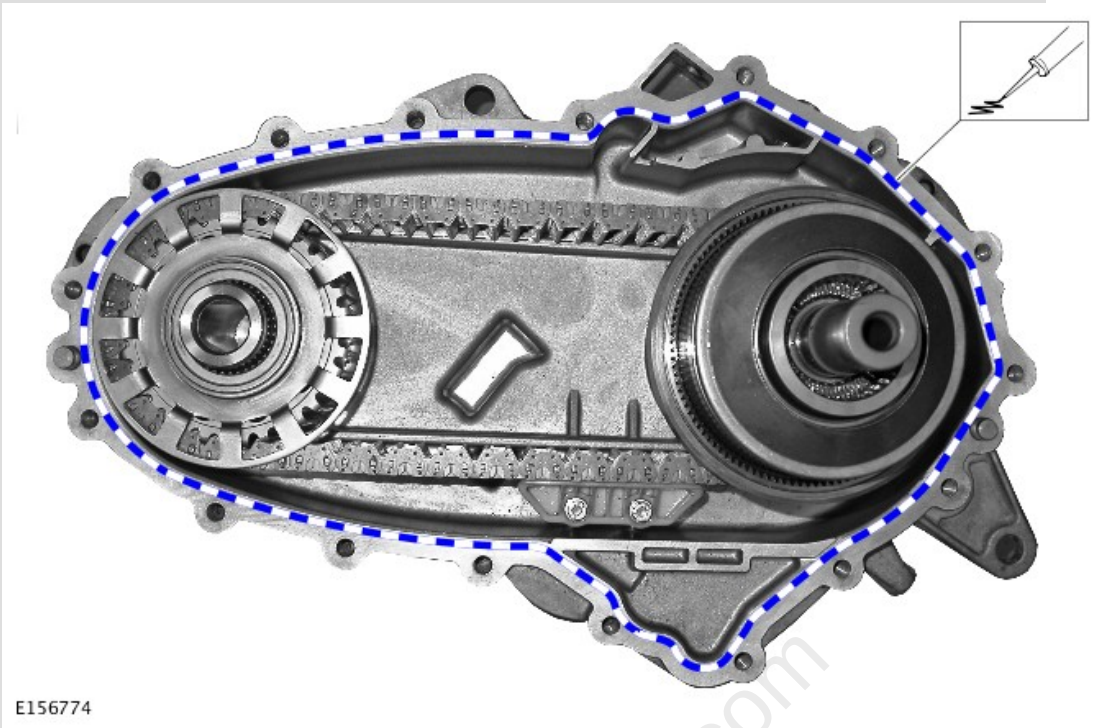

Apply a 2 mm bead of sealant to one surface of the transfer case mating face, as shown.
Refer to: Specifications (308-07A, Specifications).

9.

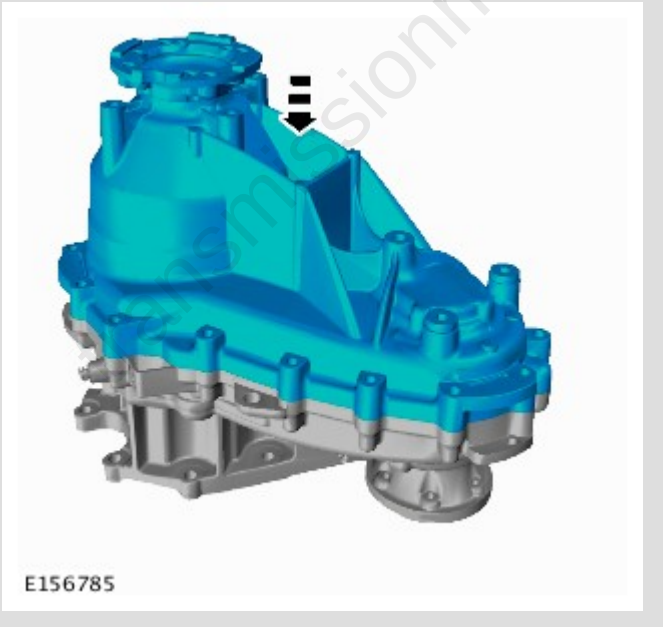

transmissionmanuals.com

10.

CAUTION:

Only tighten the bolts finger-tight at this stage.

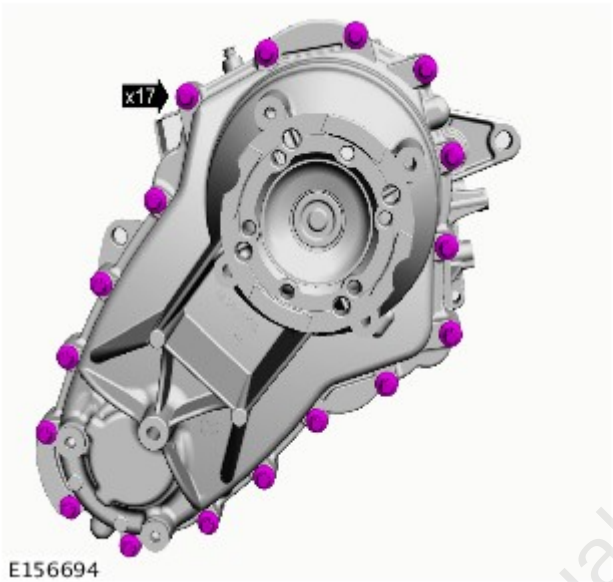

Install the 17 transfer box case bolts.

11.



Torque: **10 Nm**

transmissionmanuals.com

12.

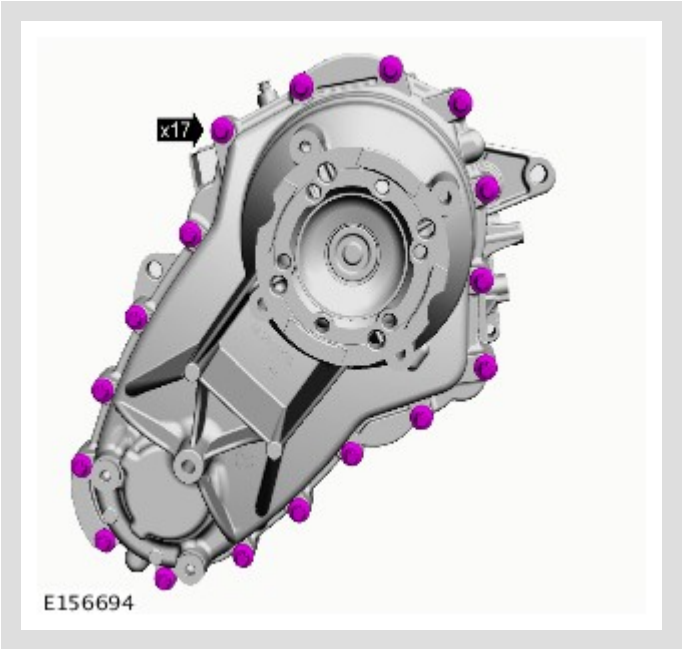

Torque: **35 Nm**

13. Install the transfer case.
Refer to: Transfer Case - TDV6 3.0L Diesel (308-07B, Installation).
Refer to: Transfer Case - V6 S/C 3.0L Petrol (308-07B, Installation).
Refer to: Transfer Case - INGENIUM I4 2.0L Diesel (308-07B, Installation).

14. Fill the transfer case with the recommended fluid.
Refer to: Transfer Case Draining and Filling (308-07, General Procedures).

15. Connect the battery ground cable.
Refer to: Specifications (414-00, Specifications).

transmissionmanuals.com

PUBLISHED: 28-APR-2017
2022.0 DEFENDER (LE), 308-07

TRANSFER CASE - [+] TWIN SPEED TRANSFER CASE

TRANSFER CASE FRONT OUTPUT SHAFT BEARING (G1947976)

REMOVAL AND INSTALLATION

41.20.08	BEARING - FRONT OUTPUT SHAFT - RENEW	3000 CC, TDV6, SINGLE SPEED TRANSFER CASE, WITH PARTICULATE FILTER, WITH DIESEL EXHAUST FLUID	4.6	USED WITHINS	
41.20.08	BEARING - FRONT OUTPUT SHAFT - RENEW	3000 CC, TDV6, SINGLE SPEED TRANSFER CASE, WITH PARTICULATE FILTER, WITHOUT DIESEL EXHAUST FLUID	4.5	USED WITHINS	
41.20.08	BEARING - FRONT OUTPUT SHAFT - RENEW	3000 CC, TDV6, TWIN SPEED TRANSFER CASE, WITH PARTICULATE FILTER,	5.8	USED WITHINS	

		WITH DIESEL EXHAUST FLUID			
41.20.08	BEARING - FRONT OUTPUT SHAFT - RENEW	3000 CC, TDV6, TWIN SPEED TRANSFER CASE, WITH PARTICULATE FILTER, WITHOUT DIESEL EXHAUST FLUID	5.7	USED WITHINS	

SPECIAL TOOL(S)



205-818

Installer, Seal



308-620

Installer, Seal

transmissionmanuals.com



308-636

Installer



JLR-308-926

Support Tool, Transfer Case

transmissionmanuals.com

PART(S)

STEP	PART NAME	QUANTITY
Installation Step 2	Transfer case front output shaft bearing	1
Installation Step 3	Transfer case front output shaft oil seal	1
Installation Step 5	Circlip	1

REMOVAL

NOTE:

- Some variation in the illustrations may occur, but the essential information is always correct.
- Some components shown removed for clarity.

1. Disconnect the battery ground cable.
   Refer to: Specifications (414-00 Battery and Charging System - General Information, Specifications).

2. **WARNING:**

   Make sure to support the vehicle with axle stands.

   Raise and support the vehicle.

3. Remove the transfer case.
   Refer to: Transfer Case - V6 S/C 3.0L Petrol (308-07 Transfer Case - Vehicles With: Twin Speed Transfer Case, Removal).
   Refer to: Transfer Case - TDV6 3.0L Diesel (308-07 Transfer Case - Vehicles With: Twin Speed Transfer Case, Removal).
   Refer to: Transfer Case - INGENIUM I4 2.0L Diesel (308-07 Transfer Case - Vehicles With: Twin Speed Transfer Case, Removal).

transmissionmanuals.com

4.

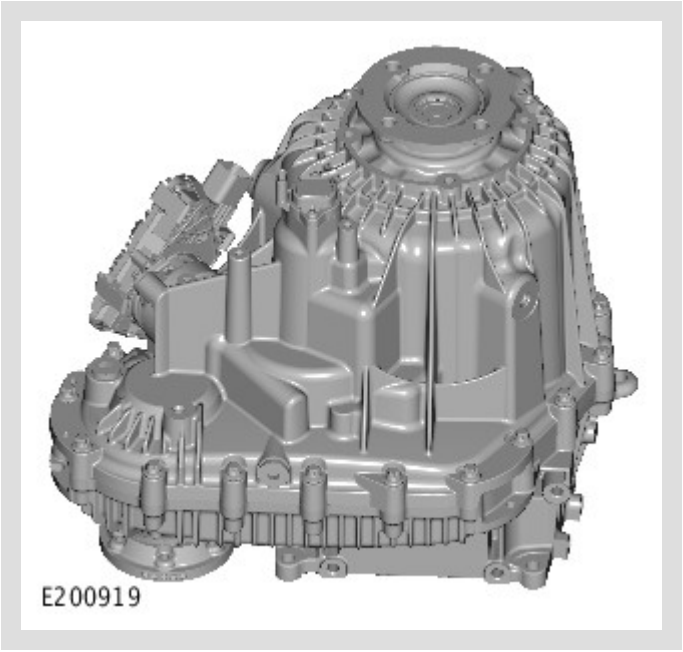

With assistance, secure the transfer case with its transmission mating face down on a flat surface.

5.

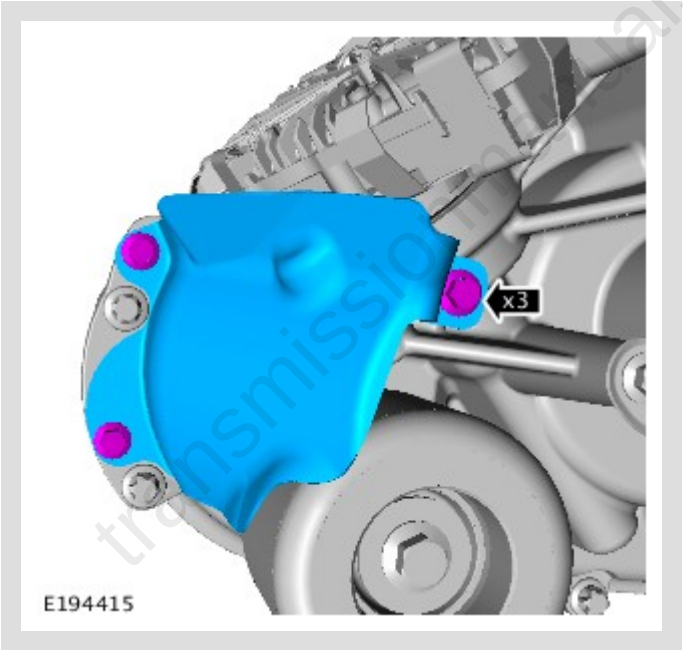

If equipped, remove the heat shield.

transmissionmanuals.com

6.

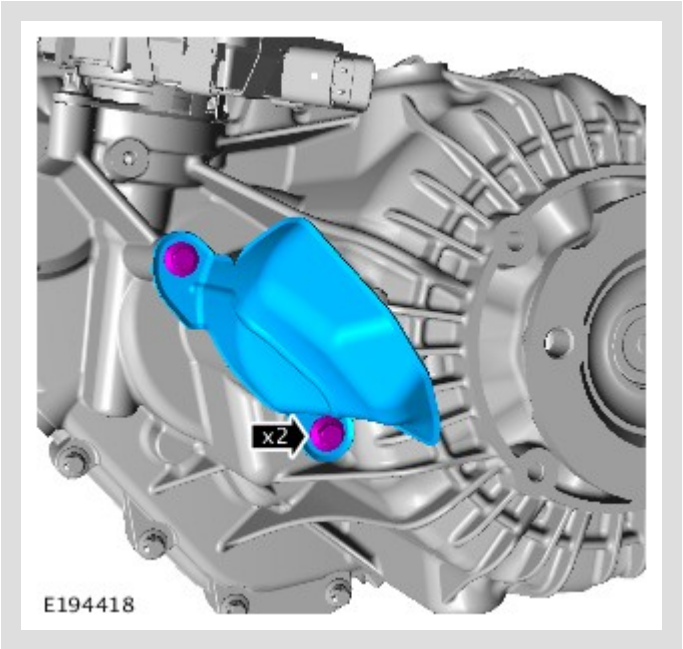

If equipped, remove the heat shield.

7.

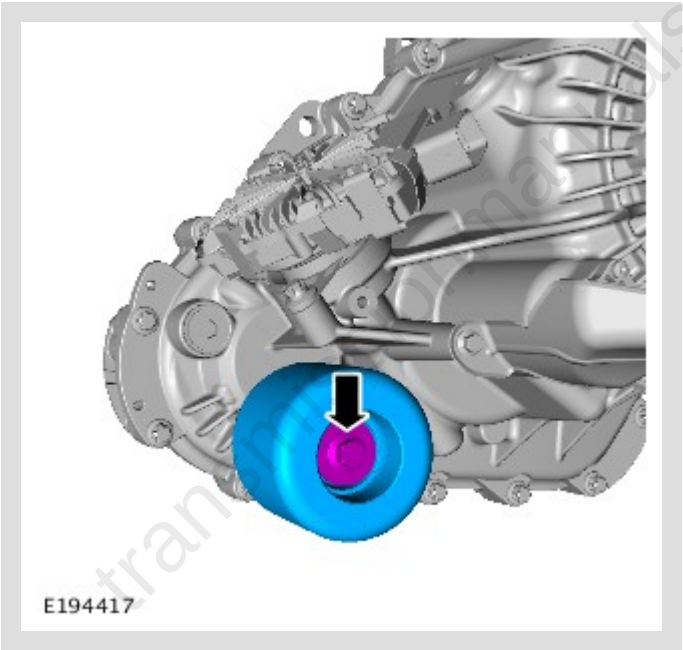

Remove the damper.

transmissionmanuals.com

8.

CAUTION:

Make sure the bolt holes are clean and free of swarf.

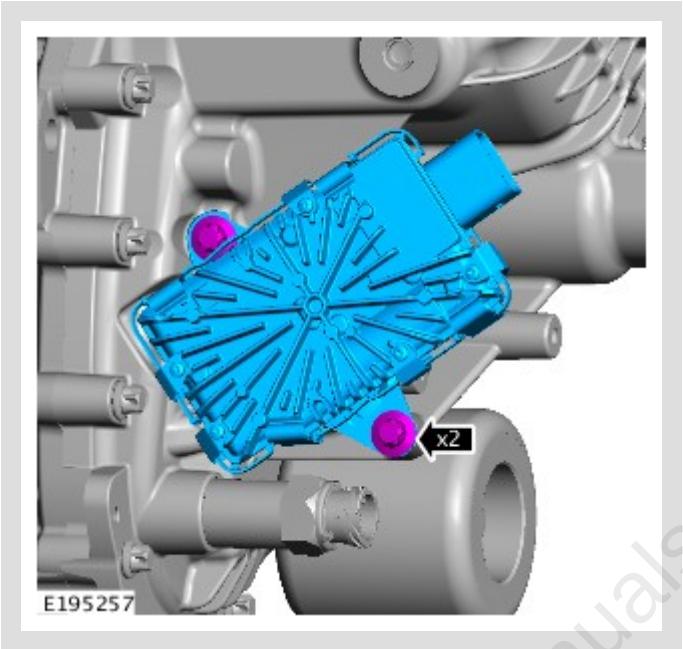

Remove the motor.

9.

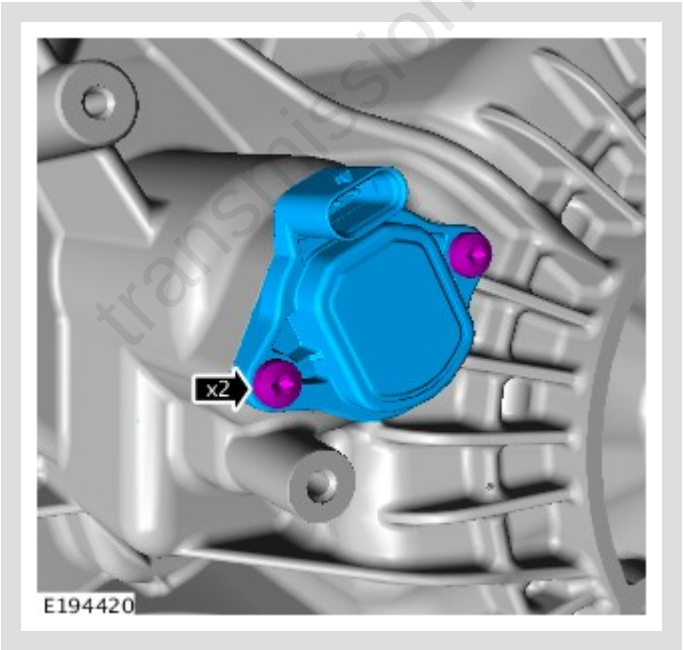

Remove the sensor.

transmissionmanuals.com

10.

CAUTION:

Make sure the bolt holes are clean and free of swarf.



Remove the 19 transfer box case bolts.

11.

CAUTION:

Care must be taken when turning the transfer case over. The transfer case halves must not be allowed to separate.

With assistance, release the transfer case and secure with the rear face of the transfer case facing down on a flat surface.

transmissionmanuals.com

12.

CAUTION:

Care must be taken to avoid damage to the mating surfaces.



Using a soft faced mallet, release the front casing.

13. Remove the sealant from the transfer case mating faces.

transmissionmanuals.com

14.

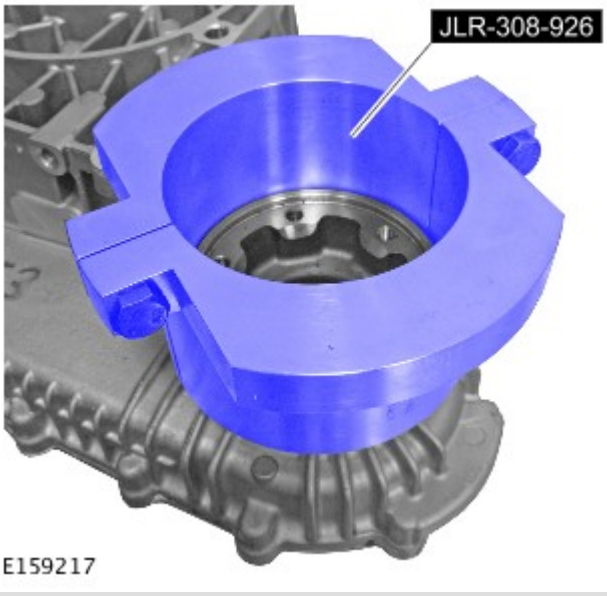

Using the special tool, support the output shaft flange.
Special Tool(s): JLR-308-926

15.

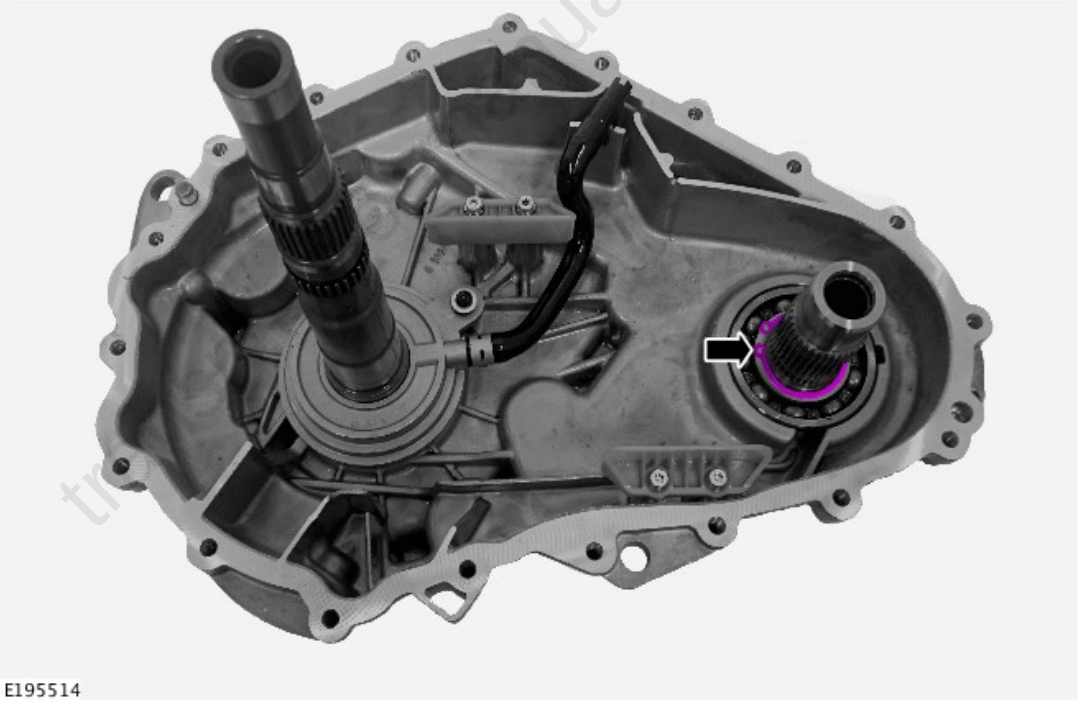

Remove and discard the circlip.

16.

CAUTION:

Do not use excessive force whilst removing the flange assembly.



Remove the front output shaft and flange assembly.

17.



Using a suitable tool, remove and discard the oil seal.

transmissionmanuals.com

18.

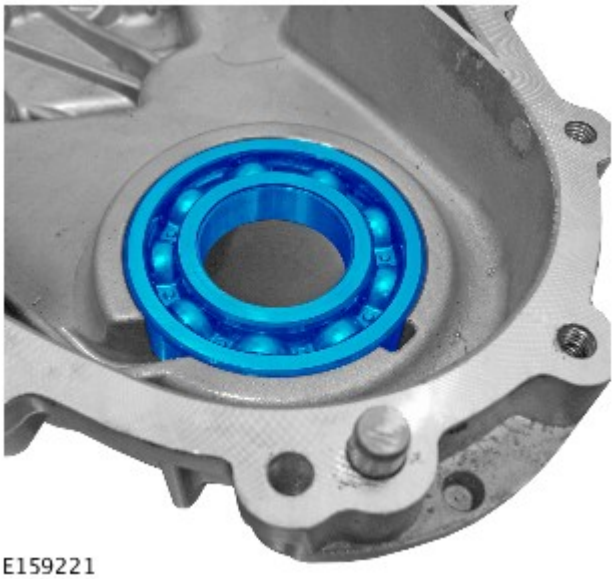

Remove the bearing.

INSTALLATION

1.

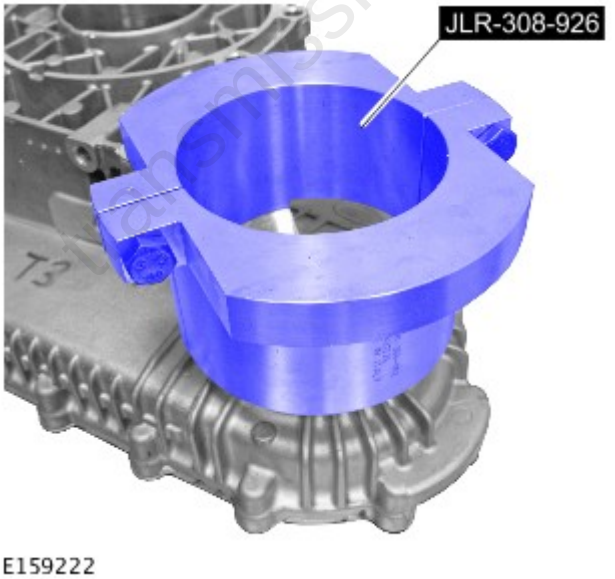

Position the special tool as shown, to support the transfer case during the next step.
Special Tool(s): JLR-308-926

transmissionmanuals.com

2.

CAUTION:

- The chamfer on the bearing inner track must face the seal.
- The transfer case must be supported by the special tool on a flat surface during this step.



transmissionmanuals.com

Install the bearing.

Special Tool(s): 308-620

Renew Part: *Transfer case front output shaft bearing* *Quantity:* *1* .

3.

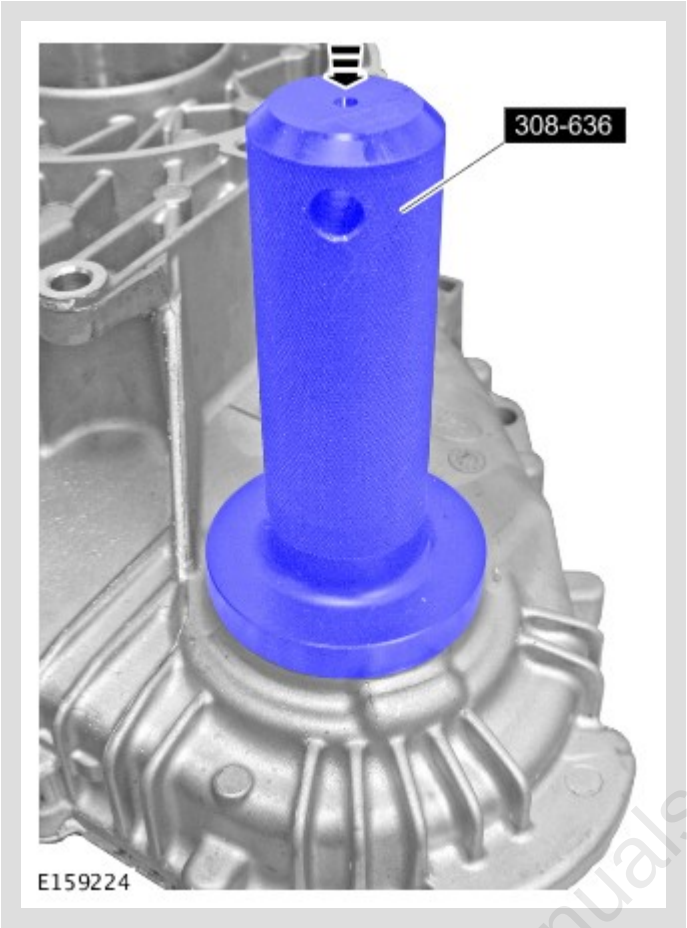

Install the seal.

Special Tool(s): 308-636

Renew Part: *Transfer case front output shaft oil seal* *Quantity:* *1* .

transmissionmanuals.com

4.

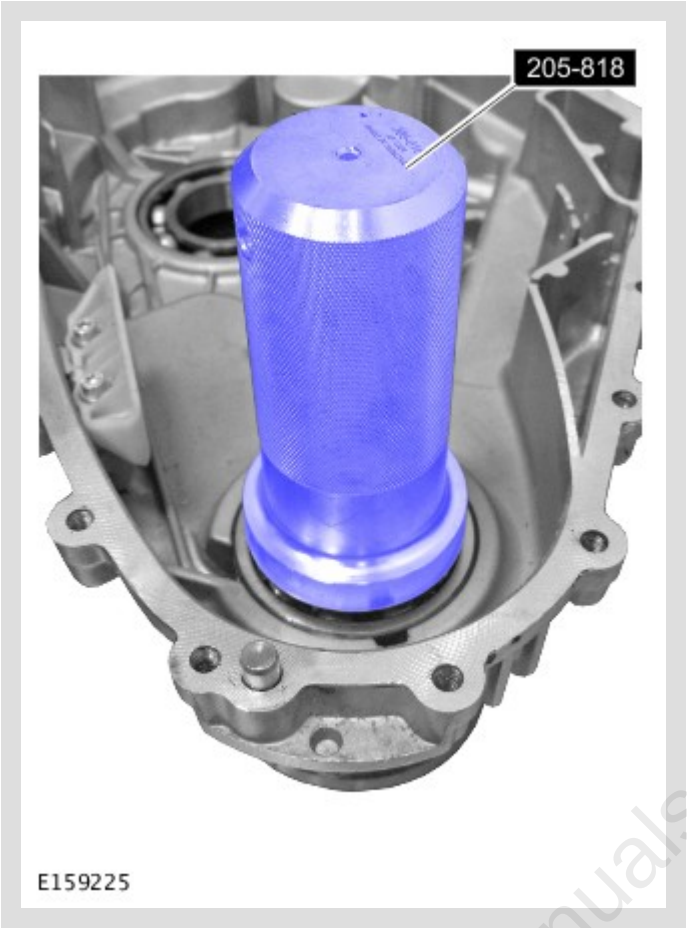

Using the special tool and with assistance, install the drive flange.
Special Tool(s): 205-818

transmissionmanuals.com

5.

NOTE:

Check that the circlip is fully engaged.



Install a new circlip.

Renew Part: Circlip Quantity: 1 .

transmissionmanuals

6.

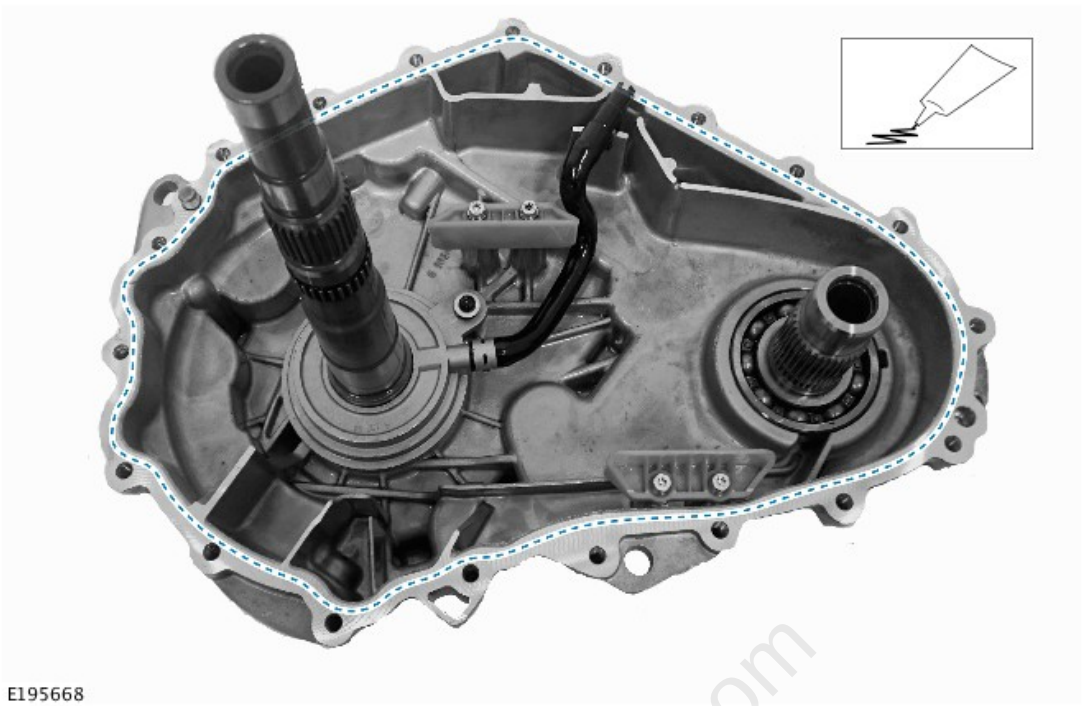

Apply a 2 mm bead of sealant to one surface of the transfer case mating face, as shown.
Refer to: Specifications (308-07 Transfer Case - Vehicles With: Twin Speed Transfer Case, Specifications).

transmissionmanuals.com

7.

CAUTION:

- Make sure that the input shaft spacer is located correctly.
- The input shaft and fluid pump assembly must be supported and held in place by hand, until it is located securely into the clutch assembly.

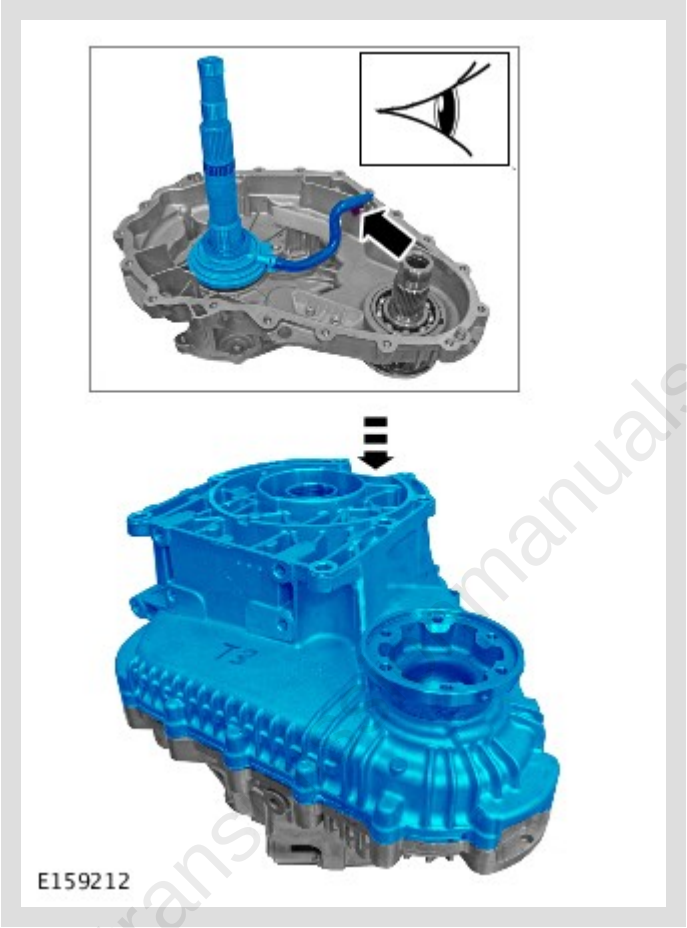

Install the front half of the transfer case.

transmanuals.com

8.

CAUTION:

Care must be taken when turning the transfer case over. The transfer case halves must not be allowed to separate.

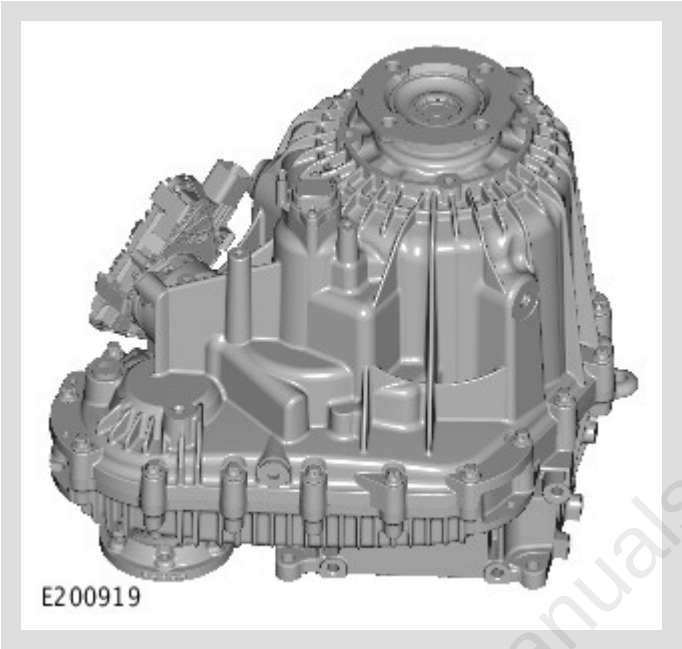

With assistance, release the transfer case and secure with its transmission mating face down on a flat surface.

transmissionmanuals.com

9.

CAUTION:

Only tighten the bolts finger-tight at this stage.

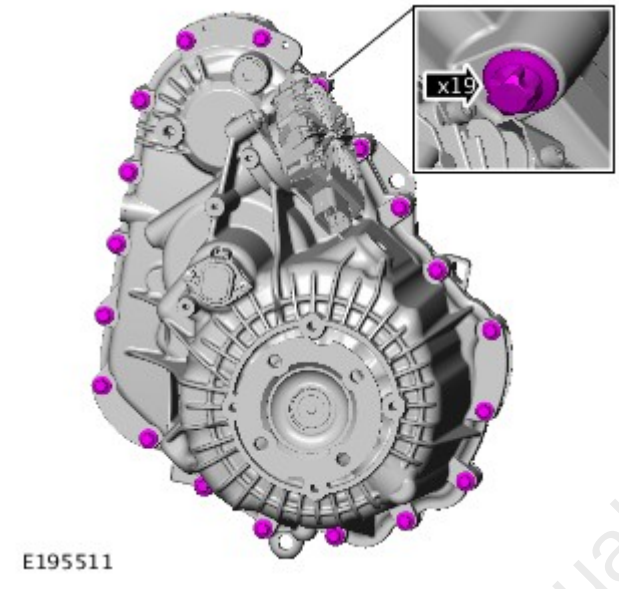

Install the 19 transfer box case bolts.

10.

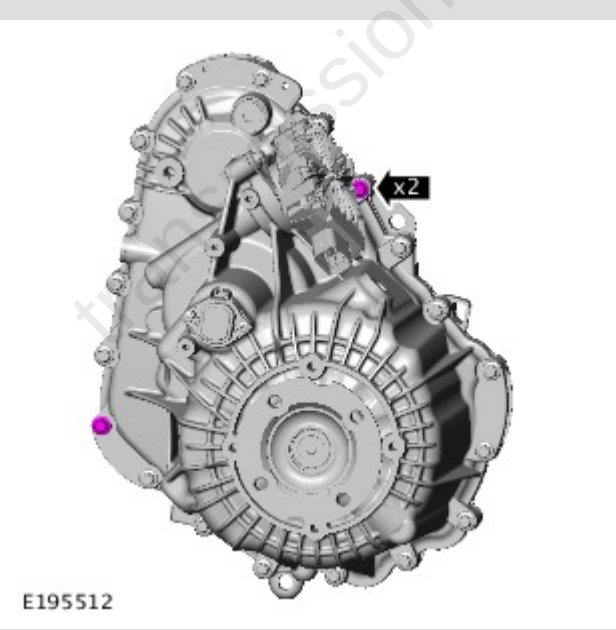

Torque: **10 Nm**

transmissionmanuals.com

11.

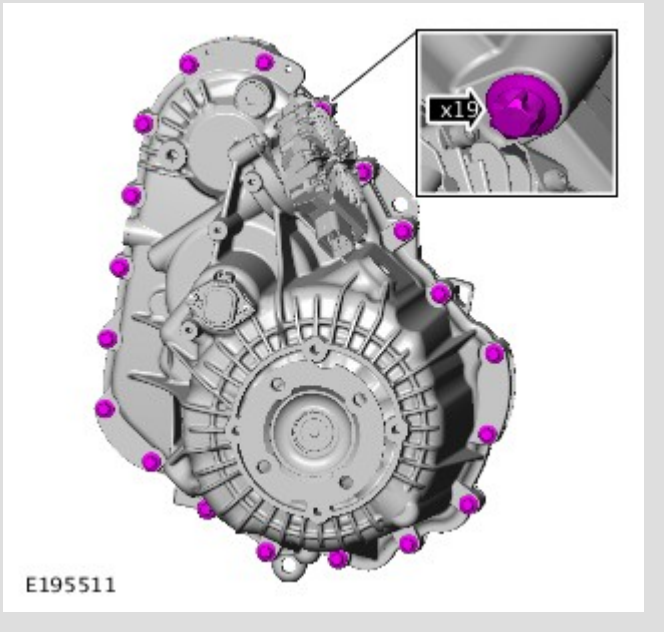

Fully tighten the 19 transfer box case bolts.

Torque: **35 Nm**

12.

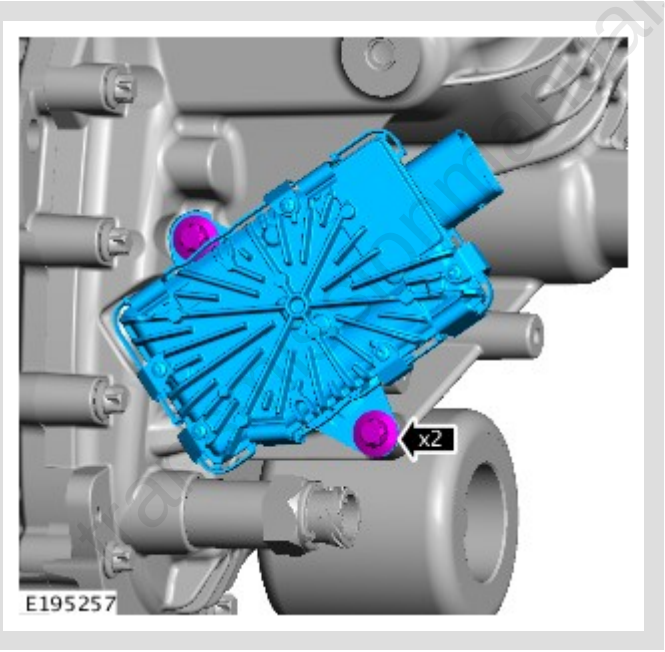

Install the motor.

Torque: **35 Nm**

13.

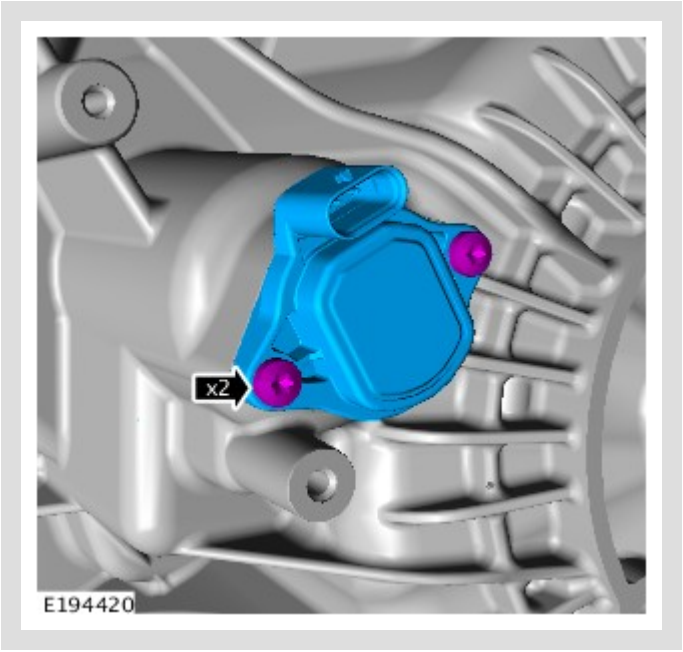

Remove the sensor.

Torque: **5 Nm**

14.

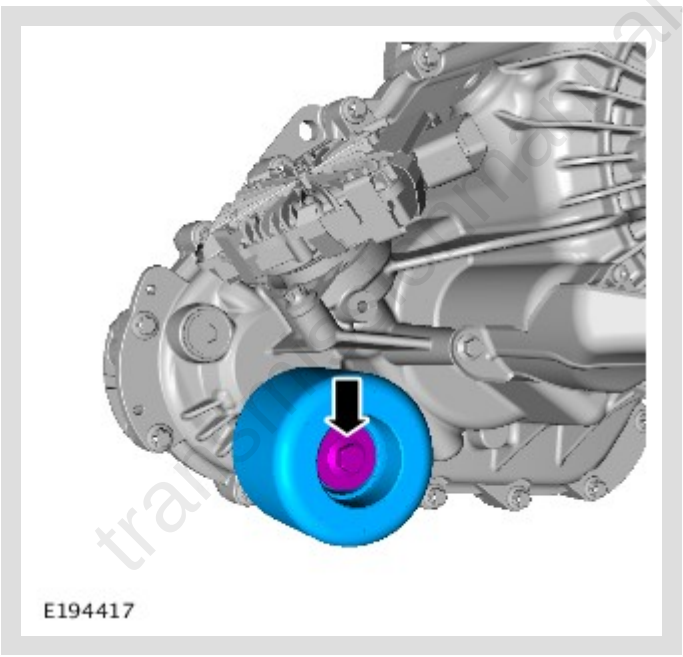

Install the damper.

Torque: **75 Nm**

transmissionmanuals.com

15.

NOTE:

This step is only required if previously removed.

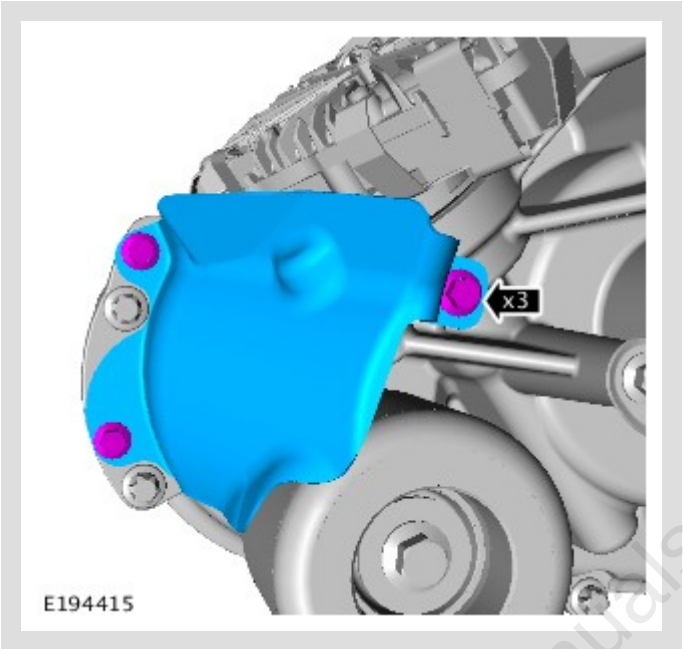

Install the heat shield.

Torque: **8 Nm**

transmissionmanuals.com

16.

NOTE:

This step is only required if previously removed.

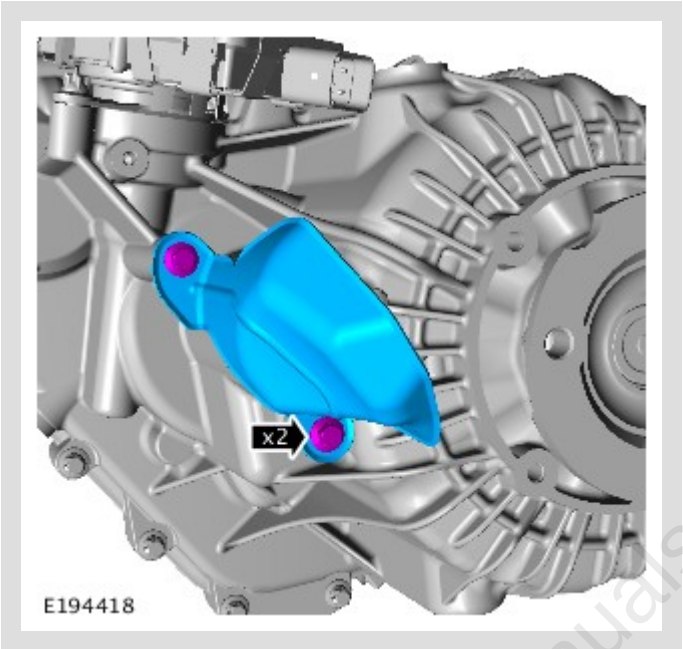

Install the heat shield.
Torque: **8 Nm**

17. Install the transfer case.
Refer to: Transfer Case - V6 S/C 3.0L Petrol (308-07 Transfer Case - Vehicles With: Twin Speed Transfer Case, Installation).
Refer to: Transfer Case - TDV6 3.0L Diesel (308-07 Transfer Case - Vehicles With: Twin Speed Transfer Case, Installation).
Refer to: Transfer Case - INGENIUM I4 2.0L Diesel (308-07 Transfer Case - Vehicles With: Twin Speed Transfer Case, Installation).

18. Connect the battery ground cable.
Refer to: Specifications (414-00 Battery and Charging System - General Information, Specifications).

19.

- Connect the Land Rover approved diagnostic equipment.
- Start the diagnostic service function "transfer case-transfer case control module replacement".
- Start the service function "transfer case-absolute position sensor replacement".
- Clear any Diagnostic Trouble Codes (DTCs) after calibration and check for correct operation.

transmissionmanuals.com

transmissionmanuals.com

PUBLISHED: 27-JUN-2017
2022.0 DEFENDER (LE), 308-07

TRANSFER CASE - [+] SINGLE SPEED TRANSFER CASE

TRANSFER CASE REAR OUTPUT SEAL

(G2006820)

REMOVAL AND INSTALLATION

41.20.54	OIL SEAL (S) - REAR OUTPUT SHAFT - RENEW	3000 CC, TDV6, SINGLE SPEED TRANSFER CASE, WITH PARTICULATE FILTER, WITH DIESEL EXHAUST FLUID	5.4	USED WITHINS	
41.20.54	OIL SEAL (S) - REAR OUTPUT SHAFT - RENEW	3000 CC, TDV6, SINGLE SPEED TRANSFER CASE, WITH PARTICULATE FILTER, WITHOUT DIESEL EXHAUST FLUID	4.6	USED WITHINS	
41.20.54	OIL SEAL (S) - REAR OUTPUT SHAFT - RENEW	3000 CC, TDV6, TWIN SPEED TRANSFER CASE, WITH PARTICULATE FILTER,	5.7	USED WITHINS	

		WITH DIESEL EXHAUST FLUID			
41.20.54	OIL SEAL (S) - REAR OUTPUT SHAFT - RENEW	3000 CC, TDV6, TWIN SPEED TRANSFER CASE, WITH PARTICULATE FILTER, WITHOUT DIESEL EXHAUST FLUID	5	USED WITHINS	

SPECIAL TOOL(S)



204-525-1

Replacer, Drive Flange



205-726

Remover/Installer, Wheel Hub Bearing

transmissionmanuals.com



308-637

Installer



JLR-308-927

Support Tool, Transfer Case



JLR-308-931

Remover, Transfer Case Flange

transmissionmanuals.com



JLR-308-933

Remover, Transfer Case Flange

transmissionmanuals.com

PART(S)

STEP	PART NAME	QUANTITY
Installation Step 2	Transfer case rear output seal and bearing kit	1
Installation Step 4	Transfer case rear output shaft snap ring	1

REMOVAL

CAUTION:

Make sure that all parts provided with the install kit are installed.

NOTE:

- Some variation in the illustrations may occur, but the essential information is always correct.
- Some components shown removed for clarity.

1. Disconnect the battery ground cable.
   Refer to: Specifications (414-00 Battery and Charging System - General Information, Specifications).

2. **WARNING:**

   Make sure to support the vehicle with axle stands.

   Raise and support the vehicle.

3. Drain the transfer case fluid.
   Refer to: Transfer Case Draining and Filling (308-07 Transfer Case - [+] Twin Speed Transfer Case, General Procedures).

4. Remove the transfer case.
   Refer to: Transfer Case - TDV6 3.0L Diesel - Gen 2/TDV6 3.0L Diesel /TDV6 3.0L Diesel - Gen 1.5 (308-07 Transfer Case - [+] Single Speed Transfer Case, Removal).
   Refer to: Transfer Case - V6 S/C 3.0L Petrol (308-07 Transfer Case - [+] Single Speed Transfer Case, Removal).
   Refer to: Transfer Case - INGENIUM I4 2.0L Diesel (308-07 Transfer Case - [+] Single Speed Transfer Case, Removal).

transmissionmanuals.com

5.

CAUTION:

Make sure the bolt holes are clean and free of foreign materials.



Remove the 17 transfer box case bolts.

transmissionmanuals.com

6.

WARNING:

Eye protection must be worn.

CAUTION:

Care must be taken to avoid damage to the mating surfaces.

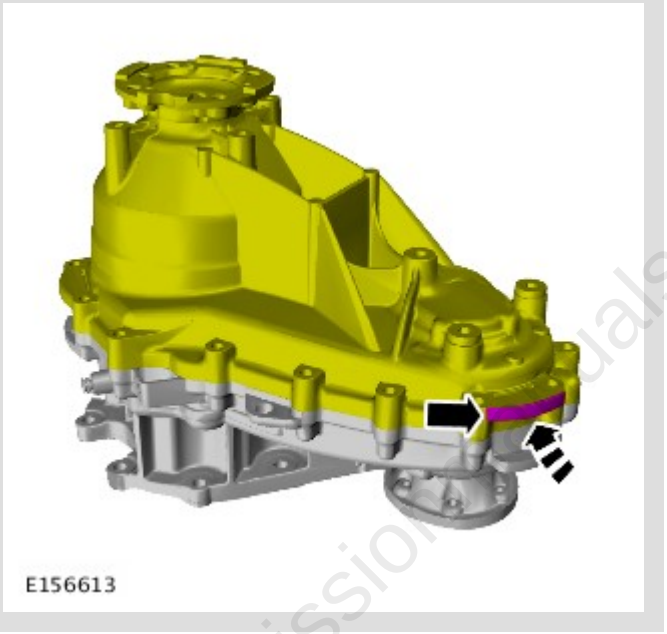

Using a soft faced mallet, release the rear casing.

7.

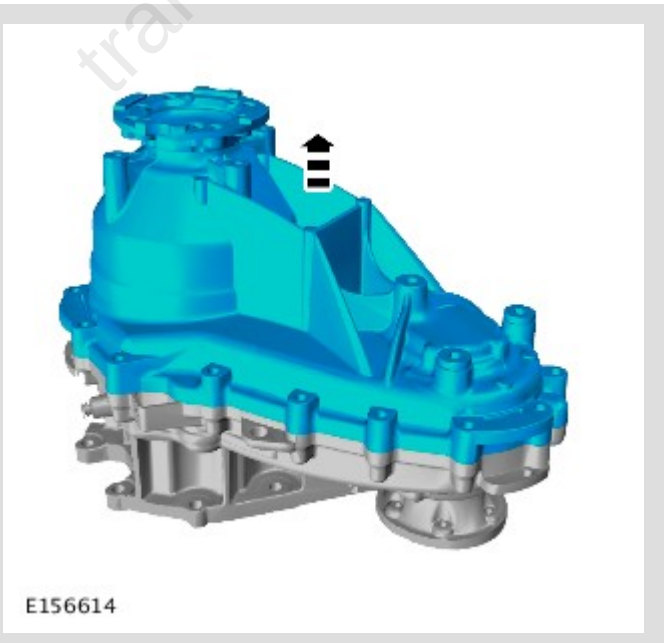

Split the transfer box case.

transmissionmanuals.com

8.

CAUTION:

Make sure that the mating faces are clean and free of foreign material.

Remove the sealant from the transfer case mating faces.

9.

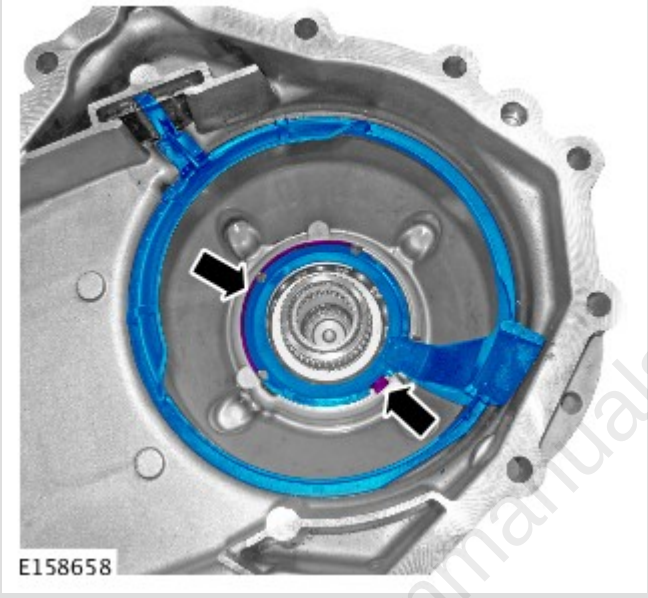

Remove the oil guide assembly.

transmissionmanuals.com

10.

NOTE:

Note the orientation of the component prior to removal.

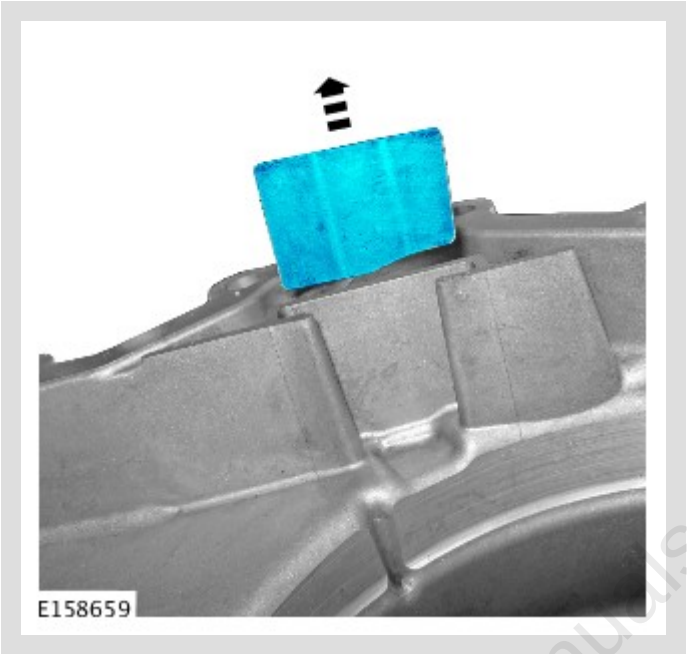

Remove the magnet.

11.



Remove the circlip.

12.



Install the special tool.
Special Tool(s): JLR-308-927

13.

CAUTION:

Make sure that the special tool is correctly located. This will make sure that the snap ring is fully compressed during the next step.

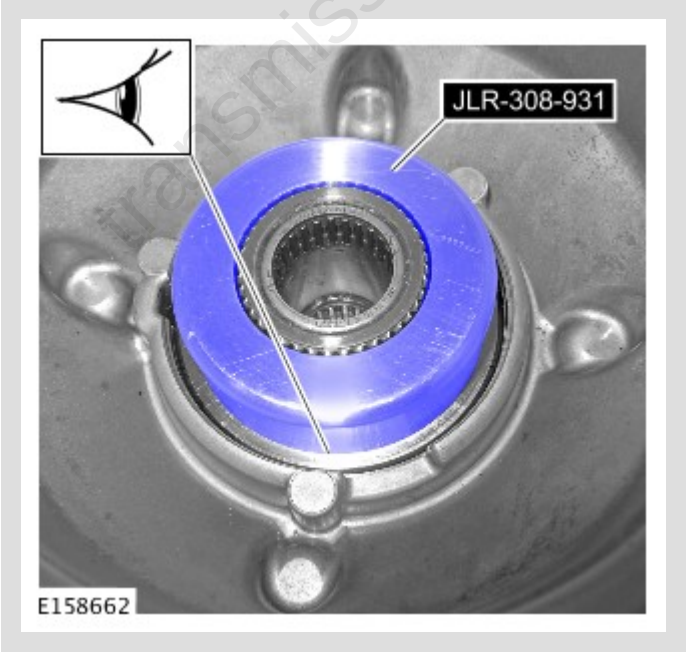

Install the special tool.
Special Tool(s): JLR-308-931

transmissionmanuals.com

14.

CAUTION:

- Do not use excessive force whilst removing the flange assembly.
- Discard the snap ring.

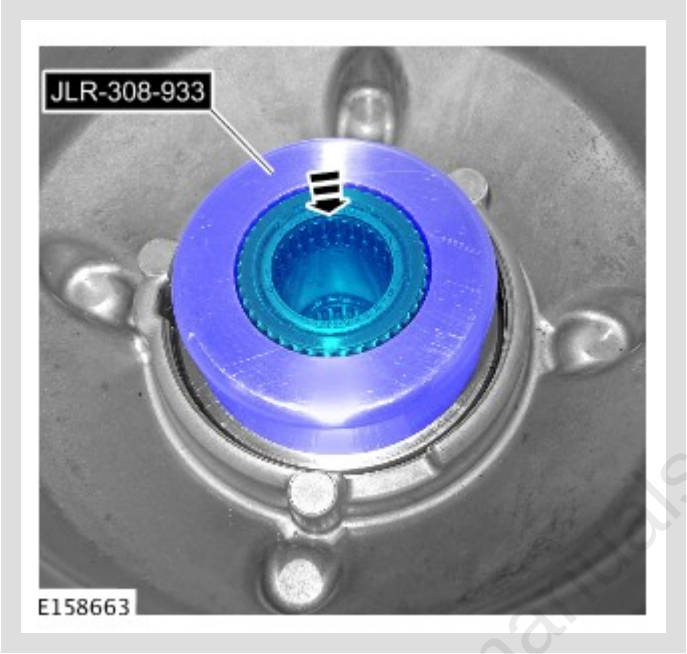

Release the transfer case rear output shaft.
Special Tool(s): JLR-308-933

15.



Remove the seal.

transmissionmanuals.com

16.



Remove the bearing.

INSTALLATION

1.

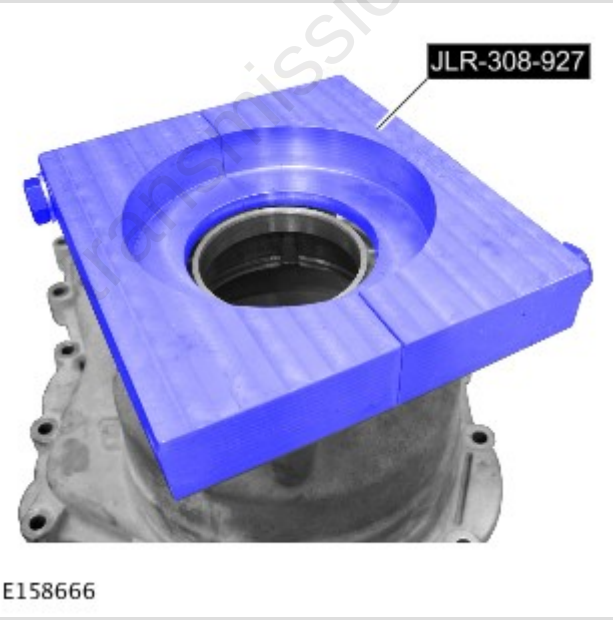

Position the special tool as shown, to support the transfer case during the next step.
Special Tool(s): JLR-308-927

transmissionmanuals.com

2.

CAUTION:

The chamfer on the bearing inner track must face the seal.



- Install the bearing.
  Special Tool(s): 205-726
- *Renew Part:* *Transfer case rear output seal and bearing kit* *Quantity:* *1* .

transmissionmanuals.com

3.



- Install the seal.
  Special Tool(s): 308-637

4.

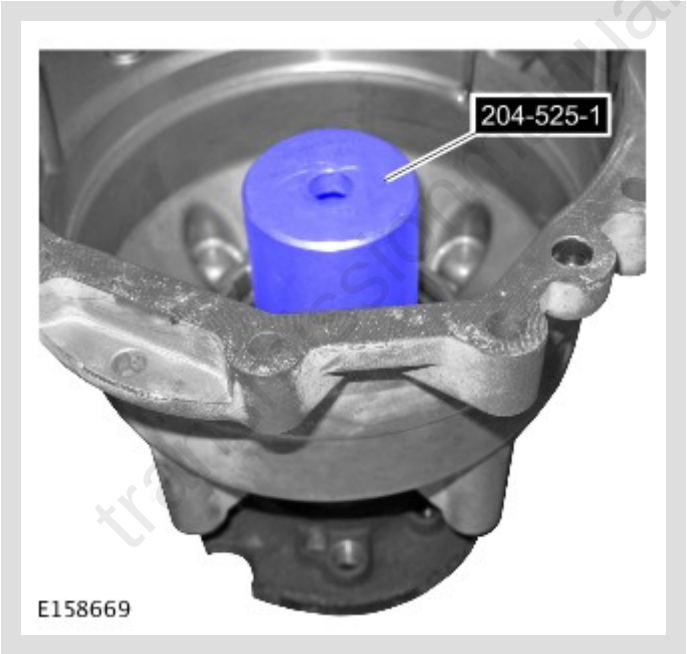

- Centralize the snap ring in the snap ring groove before installing the output flange.
- Extreme care is necessary to make sure the snap ring enters the bearing squarely.
- Install a new snap ring.
  Renew Part: *Transfer case rear output shaft snap ring* *Quantity:* *1* .
- Using the special tool and with assistance, install the drive flange.
  Special Tool(s): 204-525-1

5.

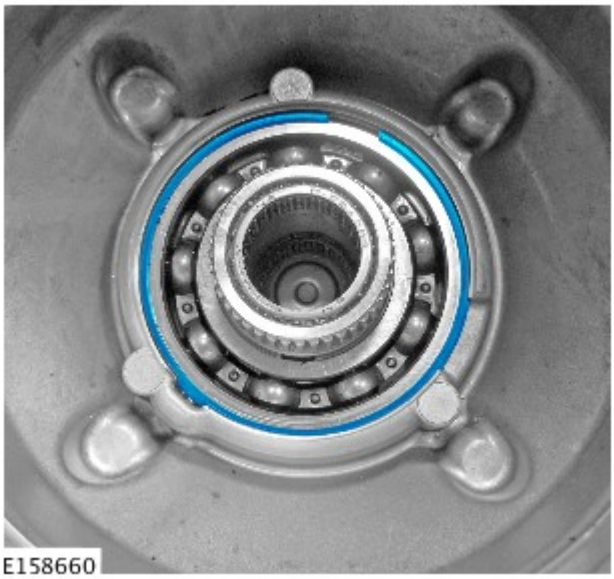

Install the circlip.

transmissionmanuals.com

6.

CAUTION:

Make sure that the component is clean and free of foreign material .

NOTE:

Make sure that the component is installed to the noted removal position.

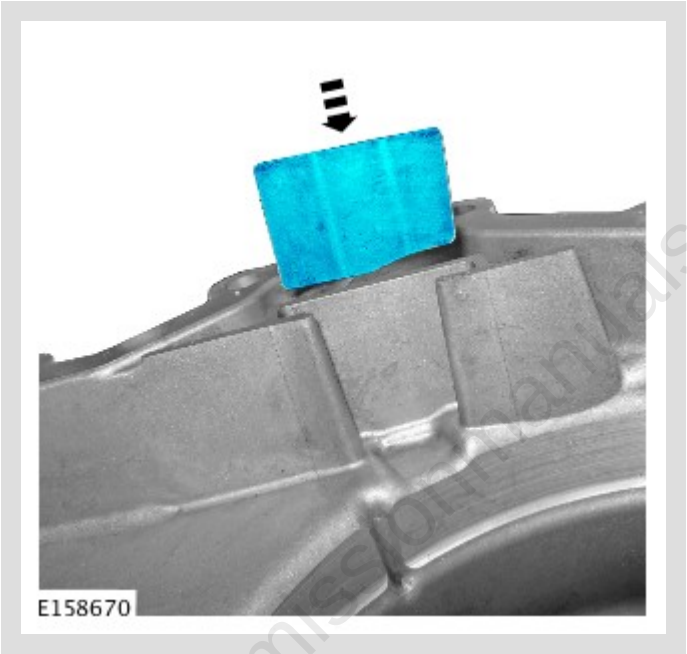

Install the magnet.

transmissionmanuals.com

7.

CAUTION:

Make sure that the retaining tangs are installed correctly.

NOTE:

Make sure that the component is correctly installed.

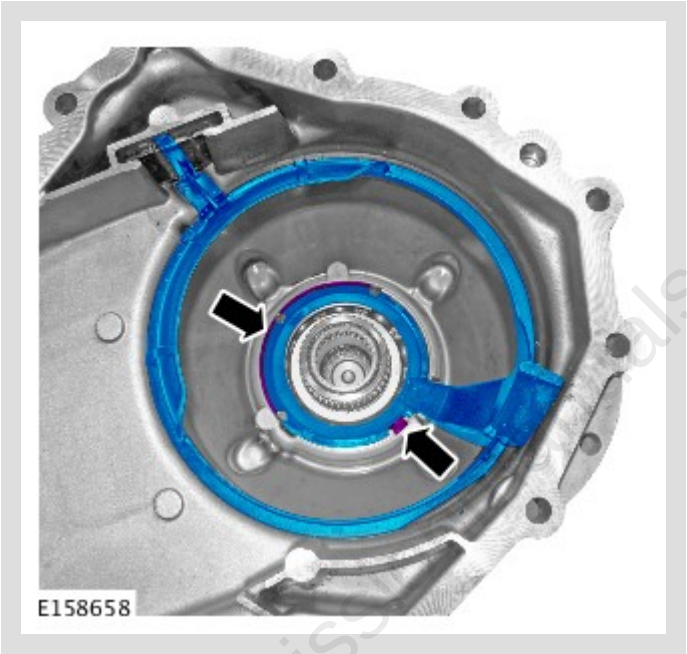

Install the oil guide assembly.

transmissionmanuals.com

8.

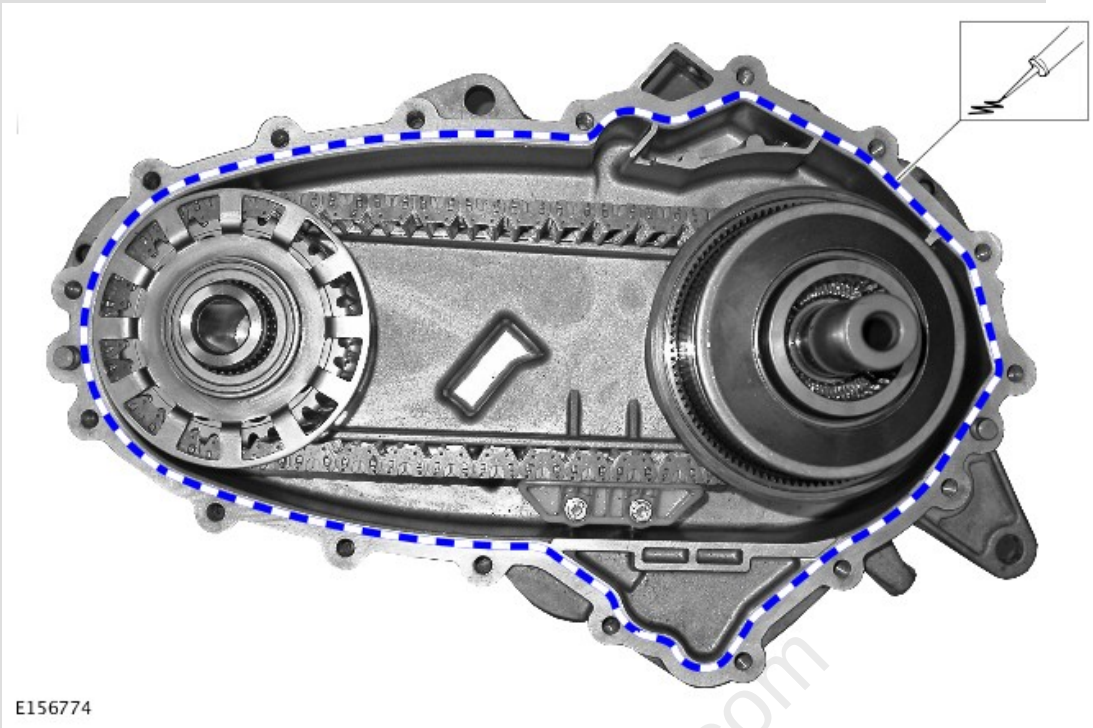

Apply a 2 mm bead of sealant to one surface of the transfer case mating face, as shown.
Refer to: Specifications (308-07 Four-Wheel Drive Systems, Specifications).

9.

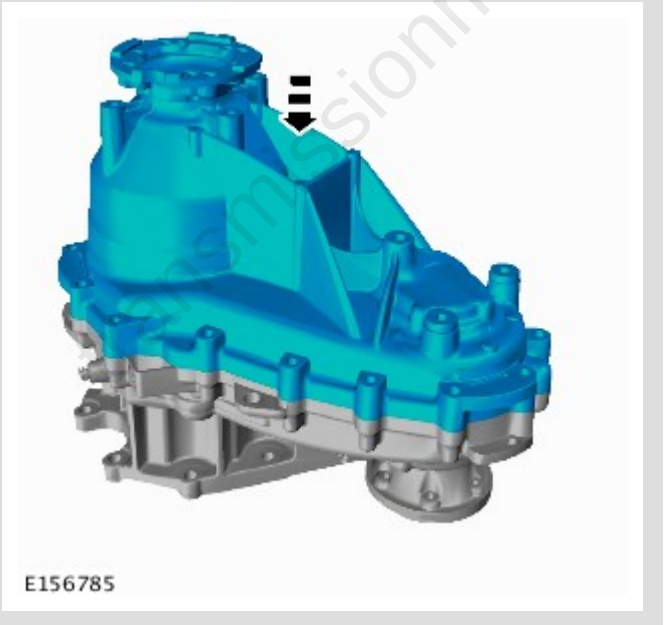

transmissionmanuals.com

10.

CAUTION:

Only tighten the bolts finger-tight at this stage.

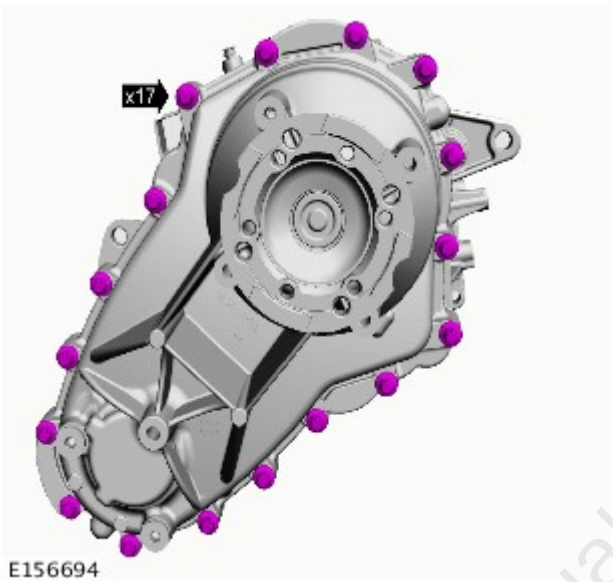

Install the 17 transfer box case bolts.

11.



Torque: **10 Nm**

transmissionmanuals.com

12.

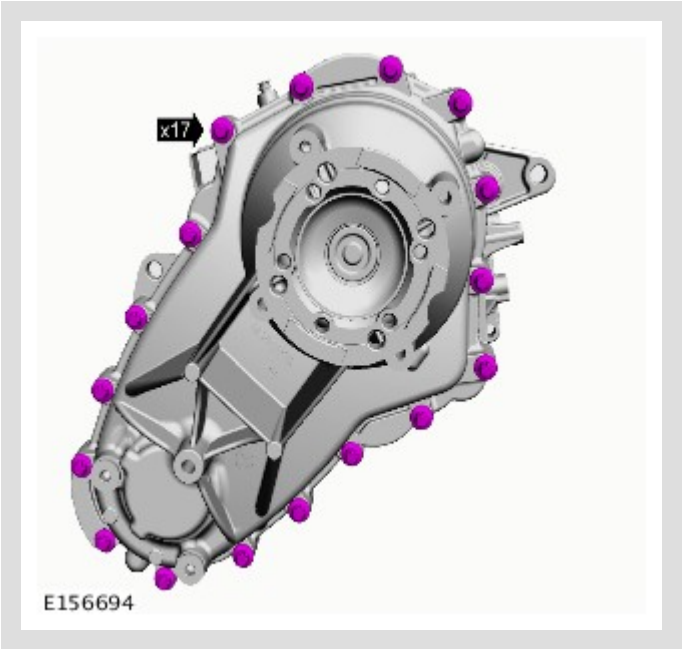

Torque: **35 Nm**

13. Install the transfer case.
Refer to: Transfer Case - TDV6 3.0L Diesel - Gen 2/TDV6 3.0L Diesel /TDV6 3.0L Diesel - Gen 1.5 (308-07 Transfer Case - [+] Single Speed Transfer Case, Installation).
Refer to: Transfer Case - V6 S/C 3.0L Petrol (308-07 Transfer Case - [+] Single Speed Transfer Case, Installation).
Refer to: Transfer Case - INGENIUM I4 2.0L Diesel (308-07 Transfer Case - [+] Single Speed Transfer Case, Installation).

14. Fill the transfer case with the recommended fluid.
Refer to: Transfer Case Draining and Filling (308-07 Transfer Case - [+] Twin Speed Transfer Case, General Procedures).

15. Connect the battery ground cable.
Refer to: Specifications (414-00 Battery and Charging System - General Information, Specifications).

transmissionmanuals.com

PUBLISHED: 17-AUG-2017
2022.0 DEFENDER (LE), 308-07

TRANSFER CASE - [+] TWIN SPEED TRANSFER CASE

TRANSFER CASE REAR OUTPUT SEAL

(G2006983)

REMOVAL AND INSTALLATION

41.20.54	OIL SEAL (S) - REAR OUTPUT SHAFT - RENEW	3000 CC, TDV6, SINGLE SPEED TRANSFER CASE, WITH PARTICULATE FILTER, WITH DIESEL EXHAUST FLUID	5.4	USED WITHINS	
41.20.54	OIL SEAL (S) - REAR OUTPUT SHAFT - RENEW	3000 CC, TDV6, SINGLE SPEED TRANSFER CASE, WITH PARTICULATE FILTER, WITHOUT DIESEL EXHAUST FLUID	4.6	USED WITHINS	
41.20.54	OIL SEAL (S) - REAR OUTPUT SHAFT - RENEW	3000 CC, TDV6, TWIN SPEED TRANSFER CASE, WITH PARTICULATE FILTER,	5.7	USED WITHINS	

		WITH DIESEL EXHAUST FLUID			
41.20.54	OIL SEAL (S) - REAR OUTPUT SHAFT - RENEW	3000 CC, TDV6, TWIN SPEED TRANSFER CASE, WITH PARTICULATE FILTER, WITHOUT DIESEL EXHAUST FLUID	5	USED WITHINS	

SPECIAL TOOL(S)



204-525-1

Replacer, Drive Flange



308-637

Installer

transmissionmanuals.com



JLR-308-927

Support Tool, Transfer Case

GENERAL EQUIPMENT

EQUIPMENT NAME
Land Rover diagnostic equipment

PART(S)

STEP	PART NAME	QUANTITY
Installation Step 1	Transfer case rear output seal and bearing kit	1

REMOVAL

NOTE:

- Some variation in the illustrations may occur, but the essential information is always correct.
- Some components shown removed for clarity.

transmissionmanuals.com

1. Disconnect the battery ground cable.
Refer to: Specifications (414-00 Battery and Charging System - General Information, Specifications).

2. **WARNING:**

Make sure to support the vehicle with axle stands.

Raise and support the vehicle.

3. Remove the transfer case.
Refer to: Transfer Case - V6 S/C 3.0L Petrol (308-07 Transfer Case - [+] Twin Speed Transfer Case, Removal).
Refer to: Transfer Case - TDV6 3.0L Diesel (308-07 Transfer Case - [+] Twin Speed Transfer Case, Removal).
Refer to: Transfer Case - INGENIUM I4 2.0L Diesel (308-07 Transfer Case - [+] Twin Speed Transfer Case, Removal).

4. With assistance, secure the transfer case with its transmission mating face down on a flat surface.

5. 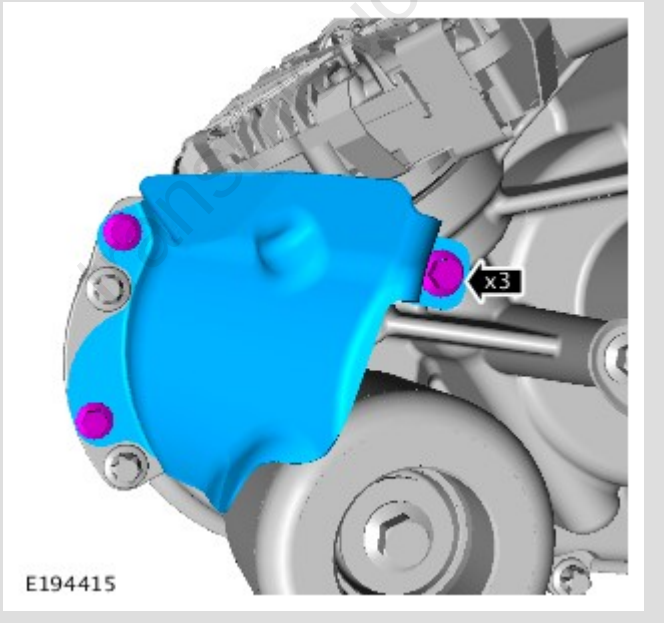

If equipped, remove the heat shield.

6.

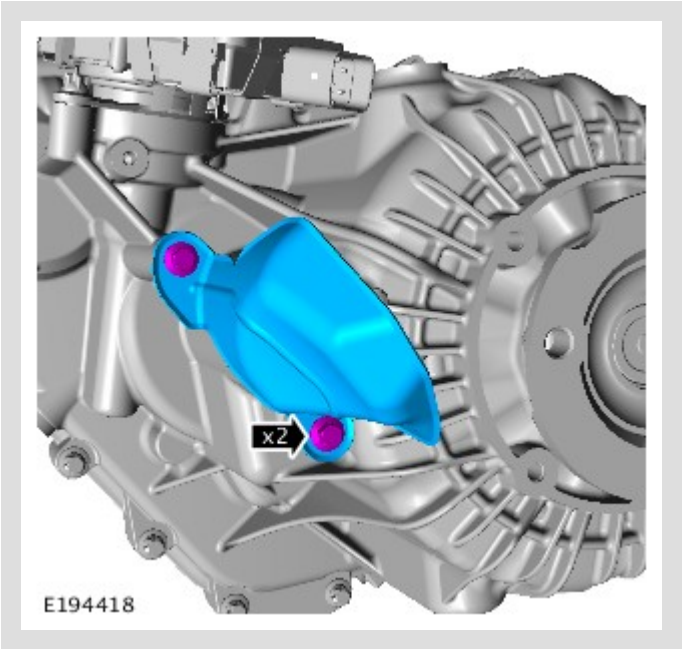

If equipped, remove the heat shield.

7.

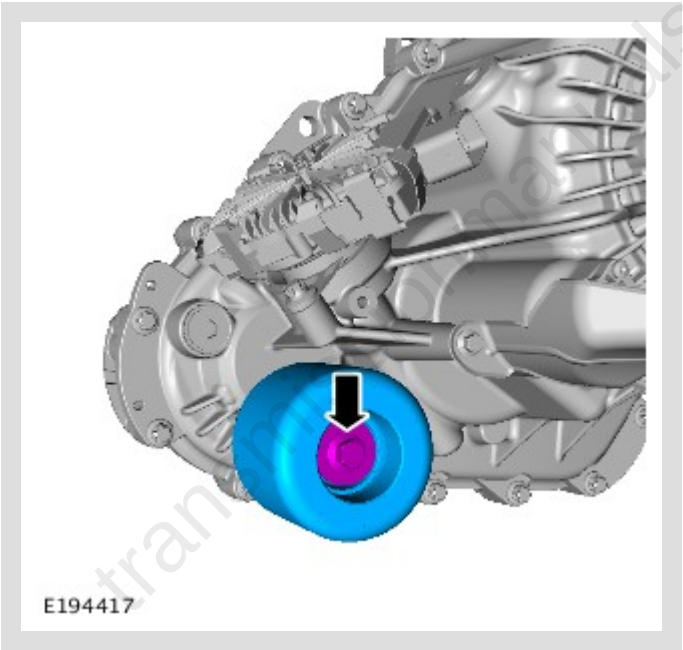

Remove the damper.

transmissionmanuals.com

8.

CAUTION:

Make sure the bolt holes are clean and free of swarf.

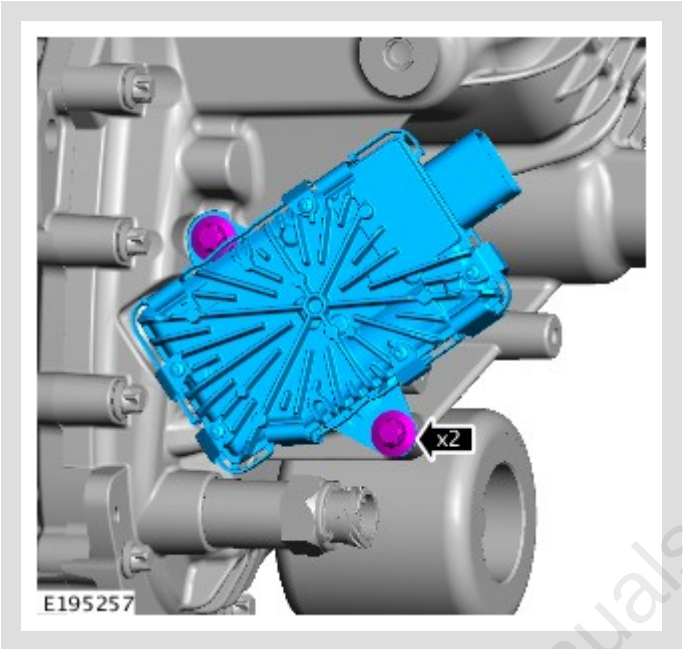

Remove the motor.

9.

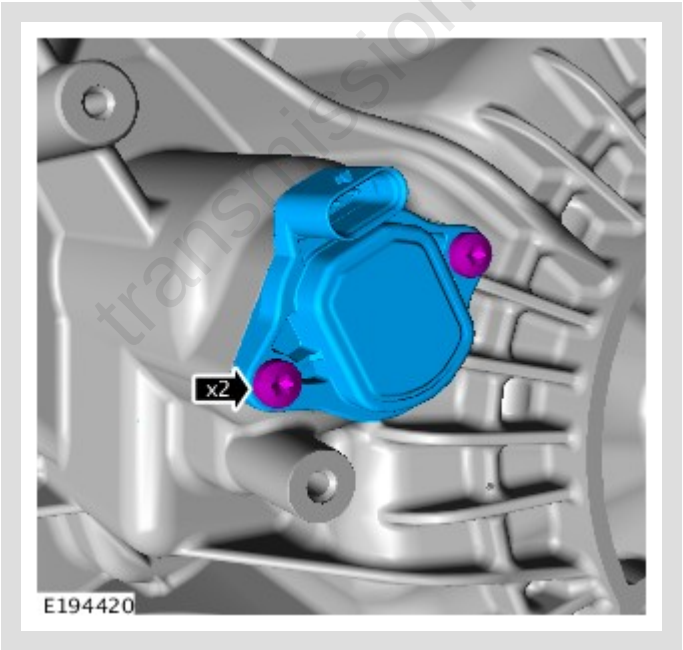

Remove the sensor.

transmissionmanuals.com

10.

CAUTION:

Make sure the bolt holes are clean and free of swarf.



Remove the 19 transfer box case bolts.

11.

CAUTION:

Care must be taken when turning the transfer case over. The transfer case halves must not be allowed to separate.

With assistance, release the transfer case and secure with the rear face of the transfer case facing down on a flat surface.

transmissionmanuals.com

12.

CAUTION:

Care must be taken to avoid damage to the mating surfaces.



Using a soft faced mallet, release the front casing.

13. Remove the sealant from the transfer case mating faces.

transmissionmanuals.com

14.

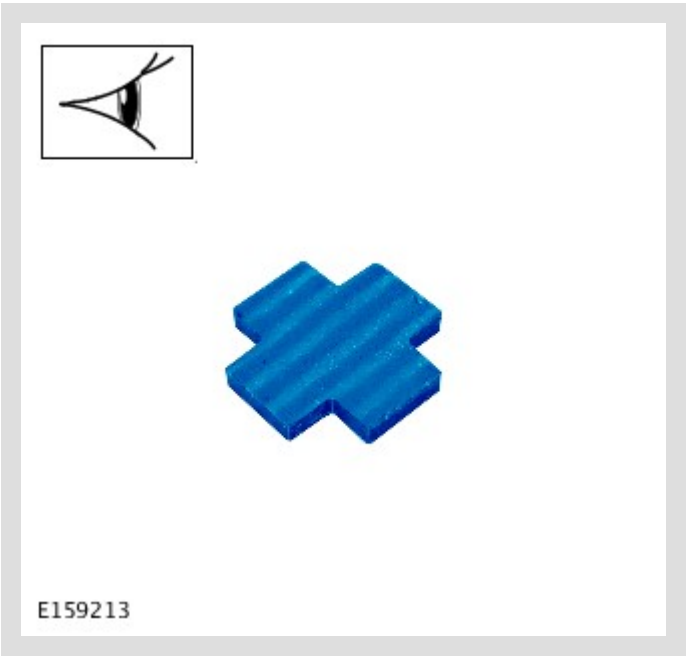

Locate the magnetic filter. The filter may have dropped into the front housing in the previous step.

15.

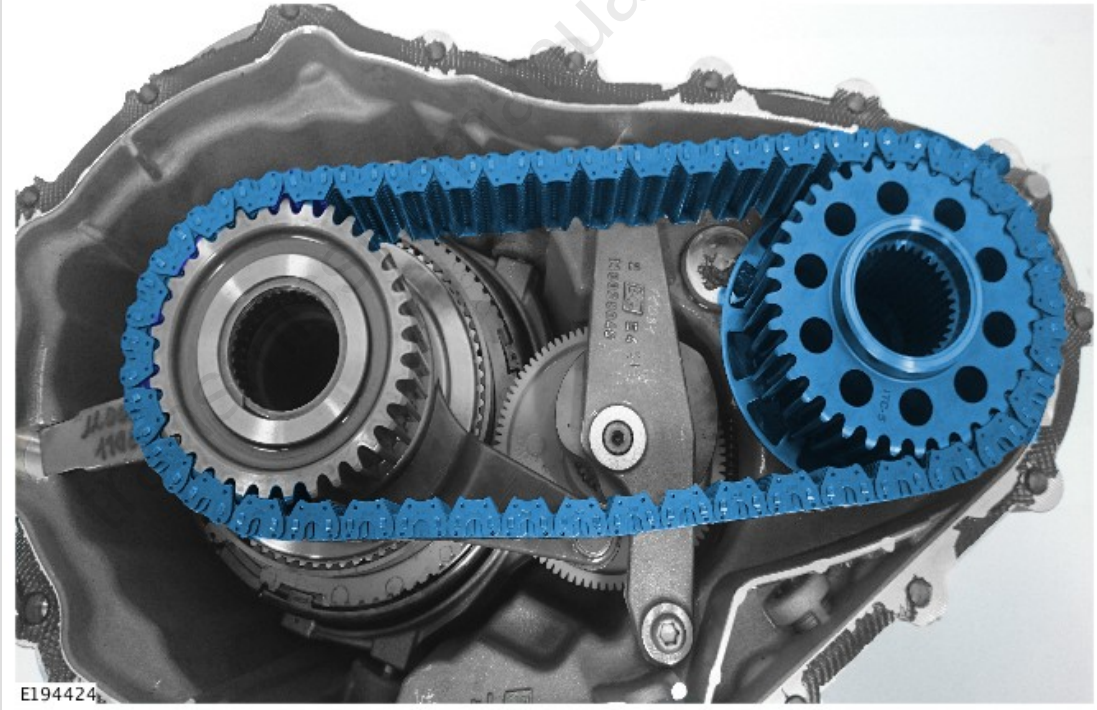

Remove the transfer case chain assembly.

16.



17.

CAUTION:

Note the fitted position of the component prior to removal.

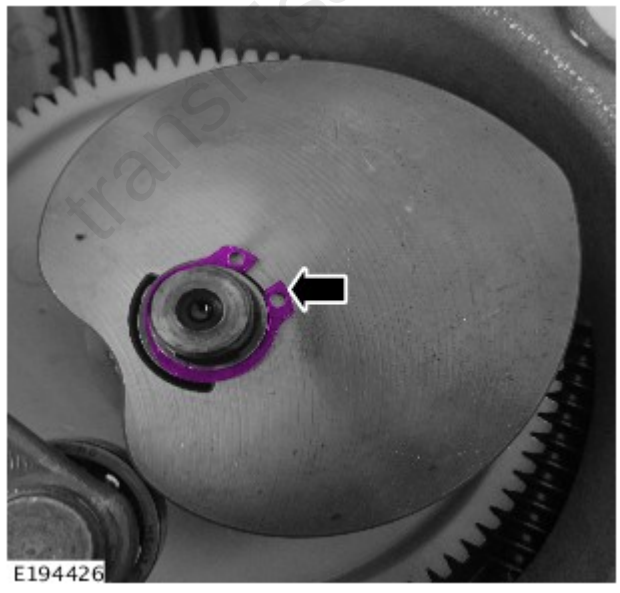

Remove and discard the circlip.

18.

CAUTION:

Note the fitted position of the component prior to removal.

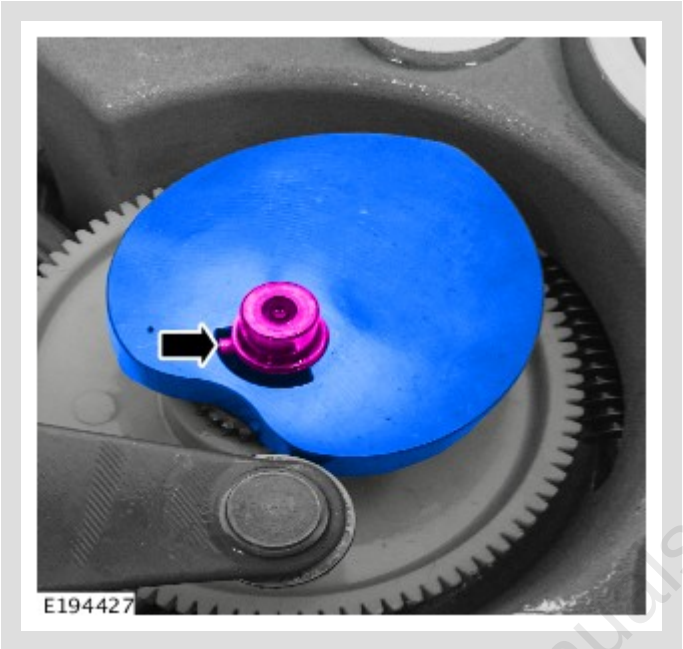

19.

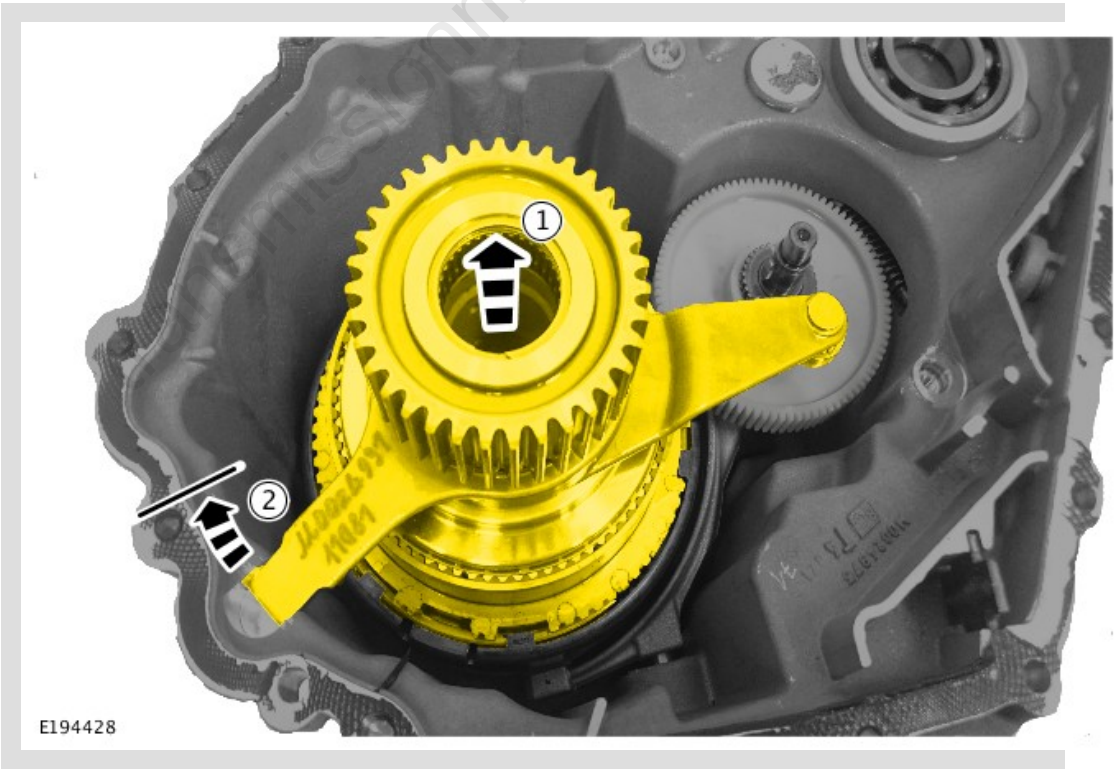

Raise and rotate the transfer differential assembly to the position shown in the illustration.

mitsubishimanuals.com

20.

CAUTION:

Note the fitted position of the component prior to removal.



Remove and discard the circlip.

21.

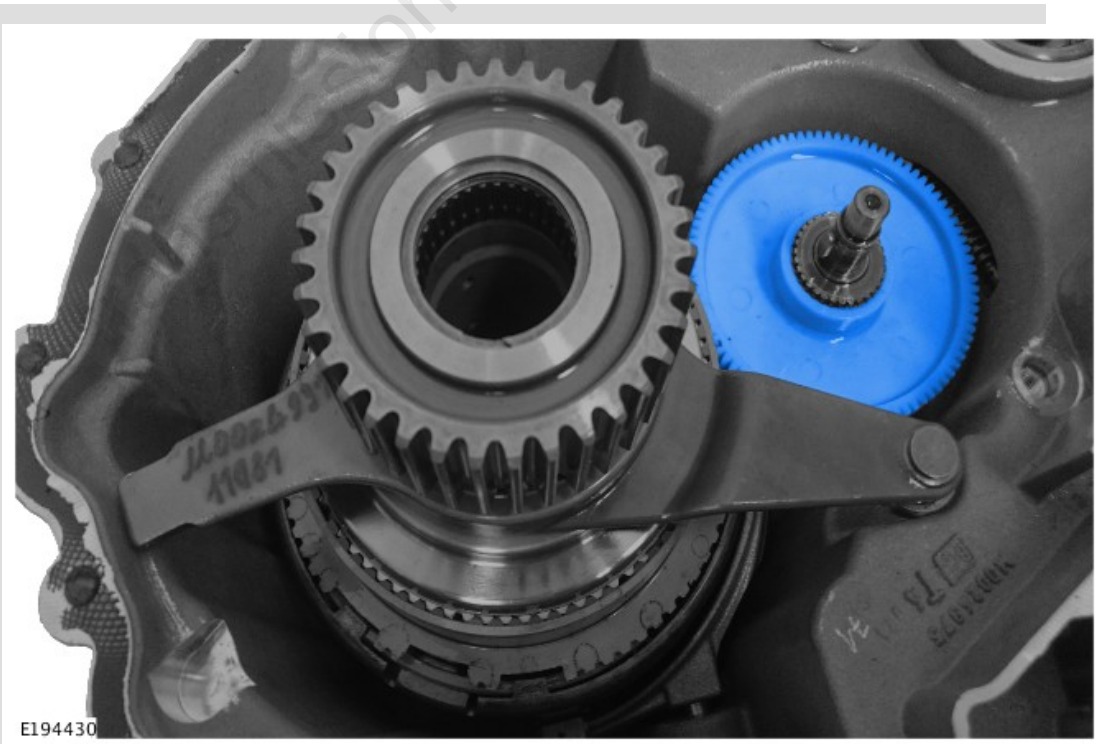

Remove the gear assembly.

22.



Remove the transfer differential assembly.

23.

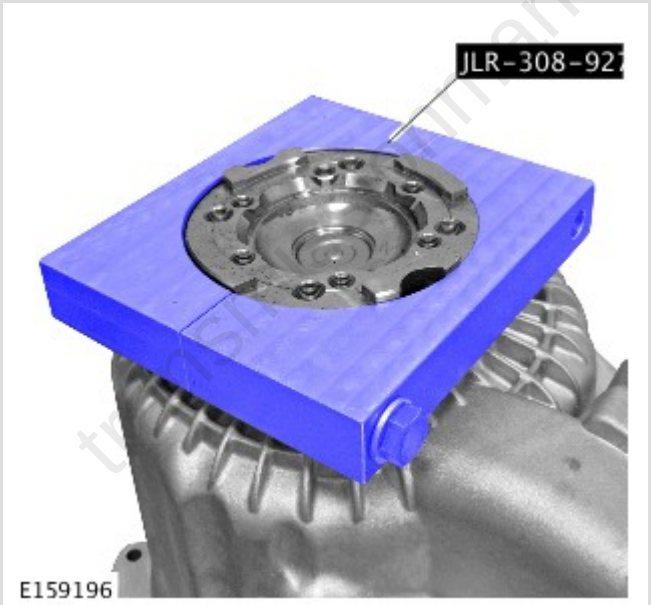

Install the special tool.

Special Tool(s): JLR-308-927

24.

CAUTION:

Note the fitted position of the component prior to removal.

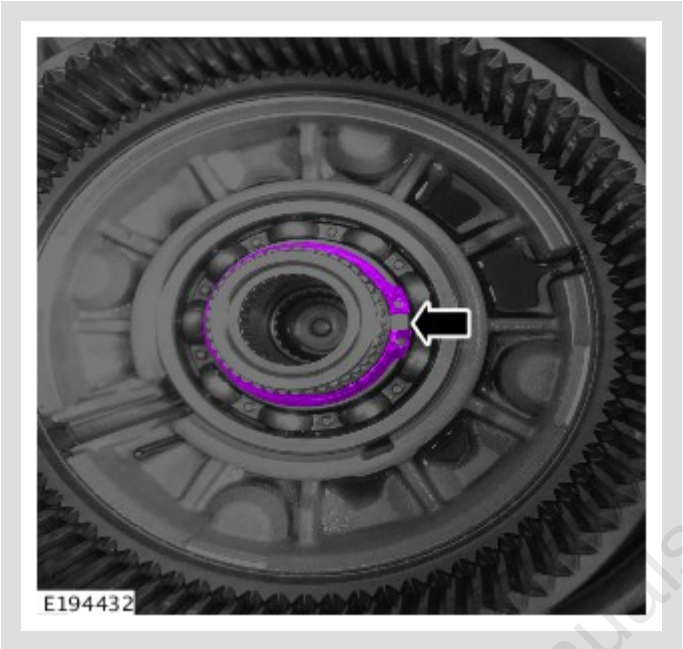

Remove and discard the circlip.

transmissionmanuals.com

25.

CAUTION:

Do not use excessive force whilst removing the flange assembly.



Remove the rear output shaft and flange assembly.

26.



Using a suitable tool, remove and discard the oil seal.

INSTALLATION

vansionmanuals.com

1.



- Install the seal.
  Special Tool(s): 308-637
- *Renew Part:* *Transfer case rear output seal and bearing kit* *Quantity:* *1* .

2.



Using the special tool and with assistance, install the drive flange.
Special Tool(s): 204-525-1

3.

NOTE:

Check that the circlip is fully engaged.

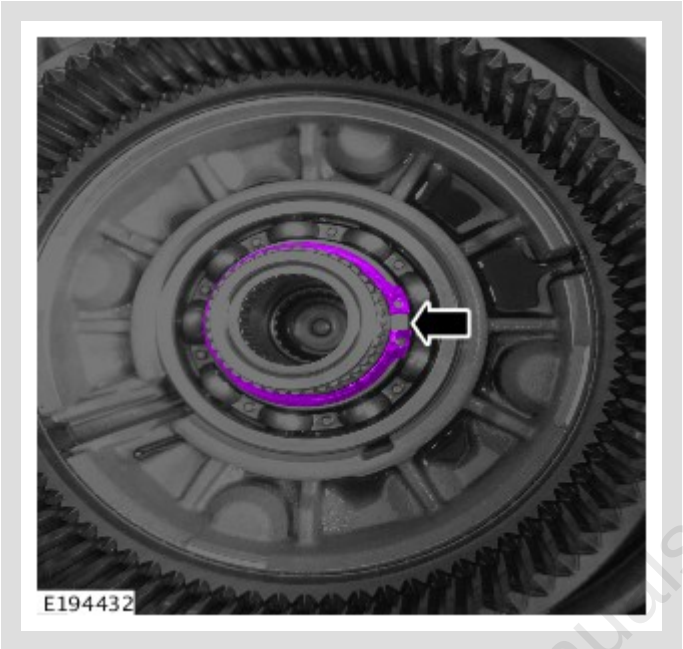

- Install a new circlip.

transmissionmanuals.com

4.

NOTE:

Rotate the differential to engage the splines.



Install the transfer differential assembly.

5.

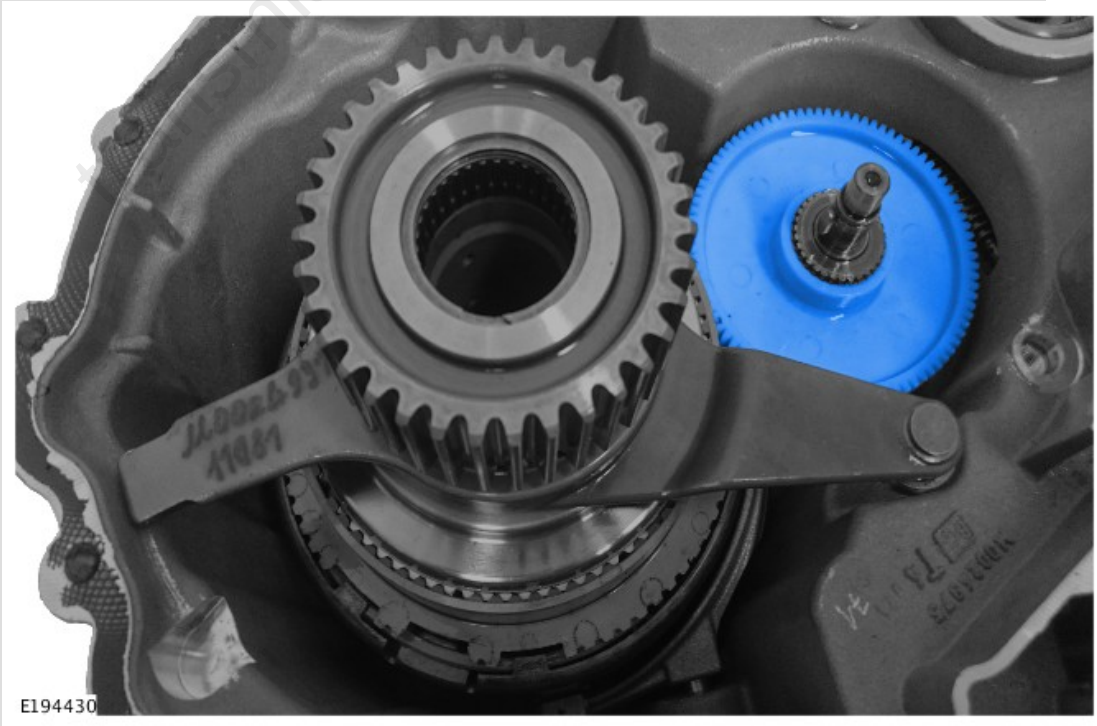

Install the gear assembly.

6.

NOTE:

Check that the circlip is fully engaged.

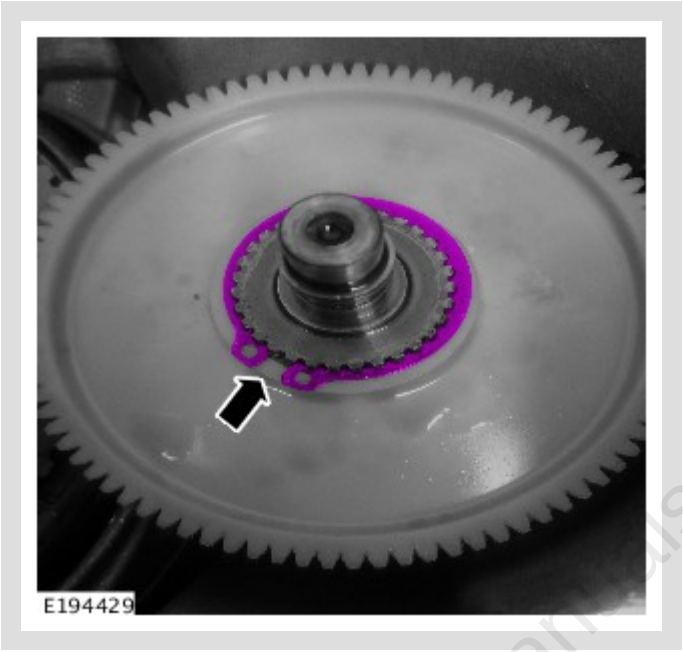

- Install a new circlip.

transmissionmanuals.com

7.

NOTE:

Make sure that the component is installed to the noted removal position.

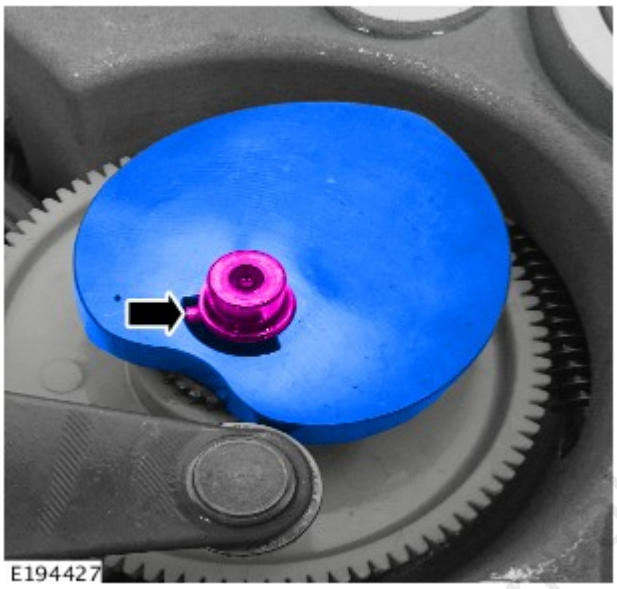

transmissionmanuals.com

8.

NOTE:

Check that the circlip is fully engaged.

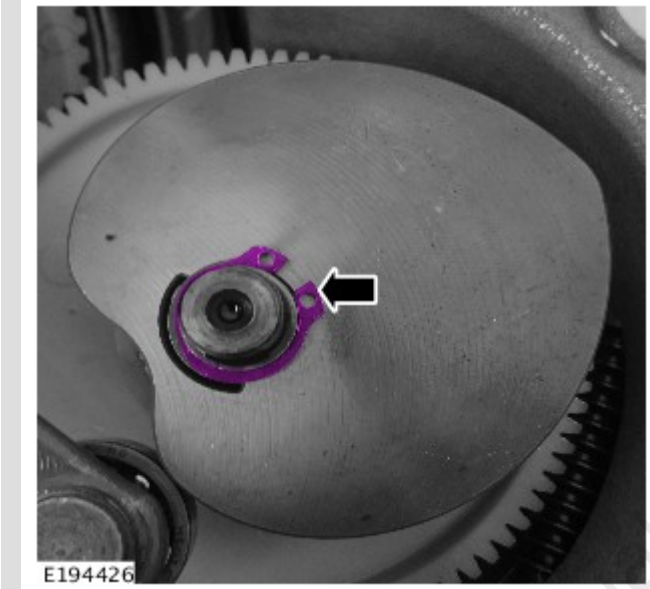

- Install a new circlip.

9.

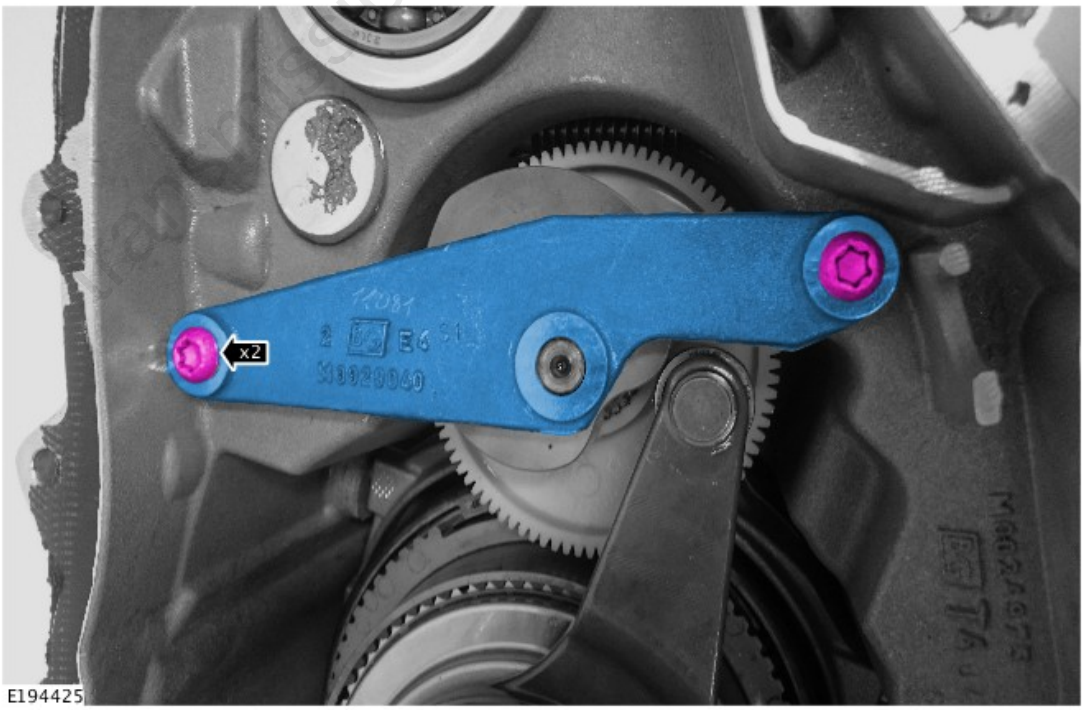

Torque: **15 Nm**

carmanualsionmanuals.com

10.

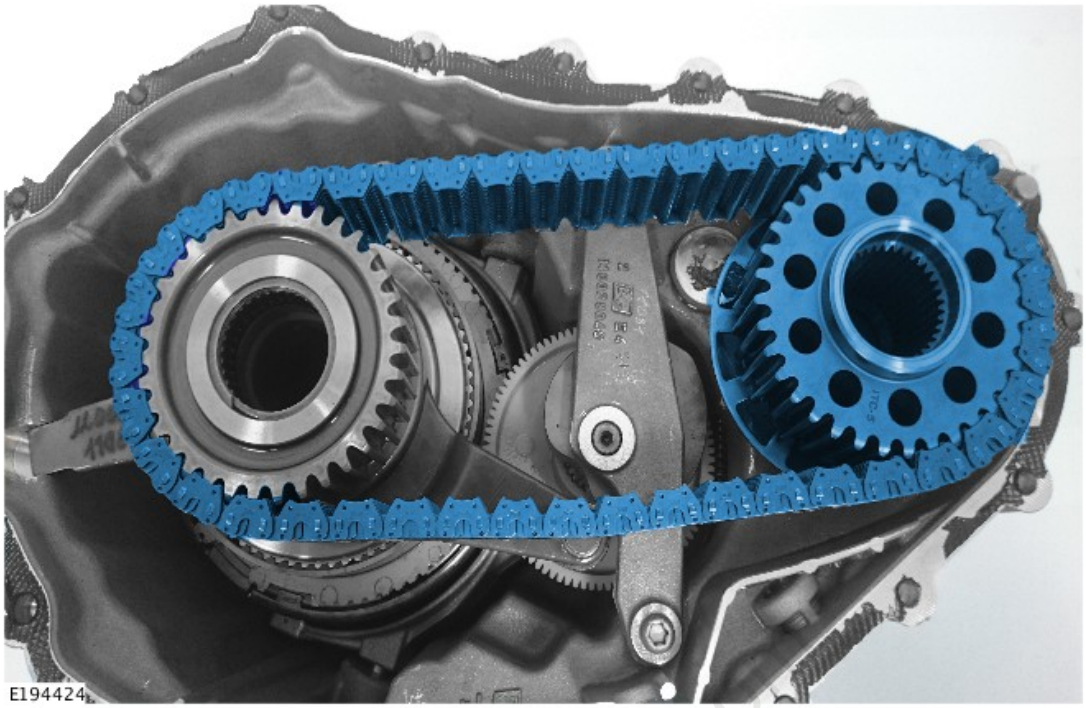

Install the transfer case chain assembly.

11.

CAUTION:

Make sure that the component is clean and free of foreign material .



Install the magnetic filter.

transmissionmanuals.co

12.

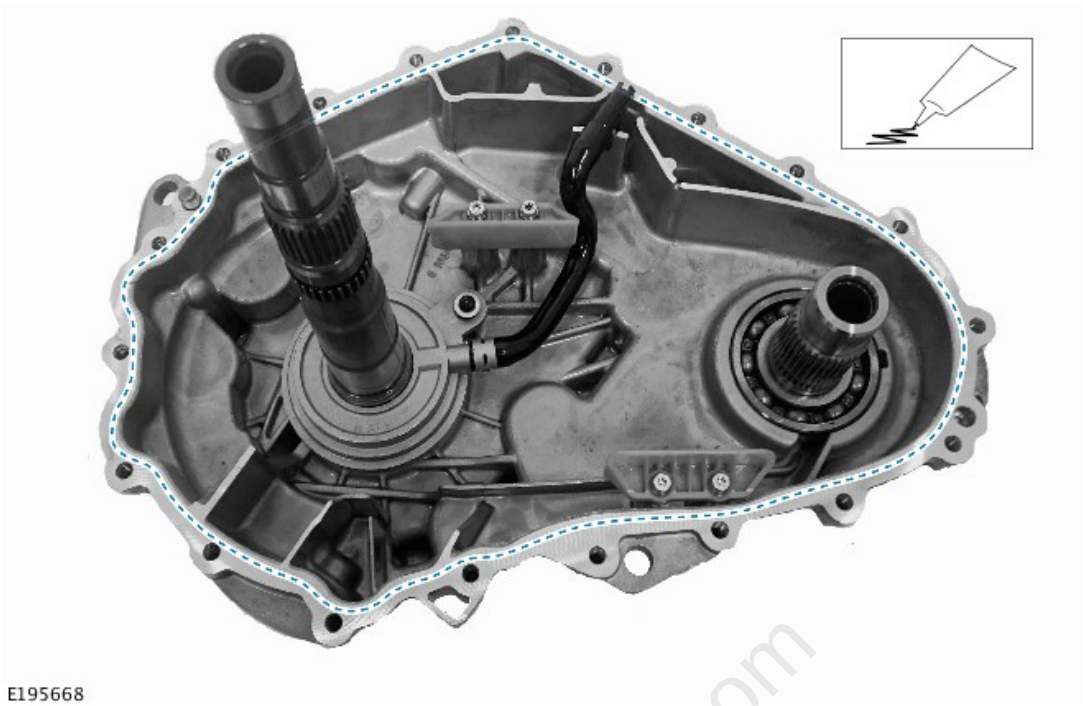

Apply a 2 mm bead of sealant to one surface of the transfer case mating face, as shown.
Refer to: Specifications (308-07 Transfer Case - [+] Twin Speed Transfer Case, Specifications).

transmissionmanuals.com

13.

CAUTION:

- Make sure that the input shaft spacer is located correctly.
- The input shaft and fluid pump assembly must be supported and held in place by hand, until it is located securely into the clutch assembly.

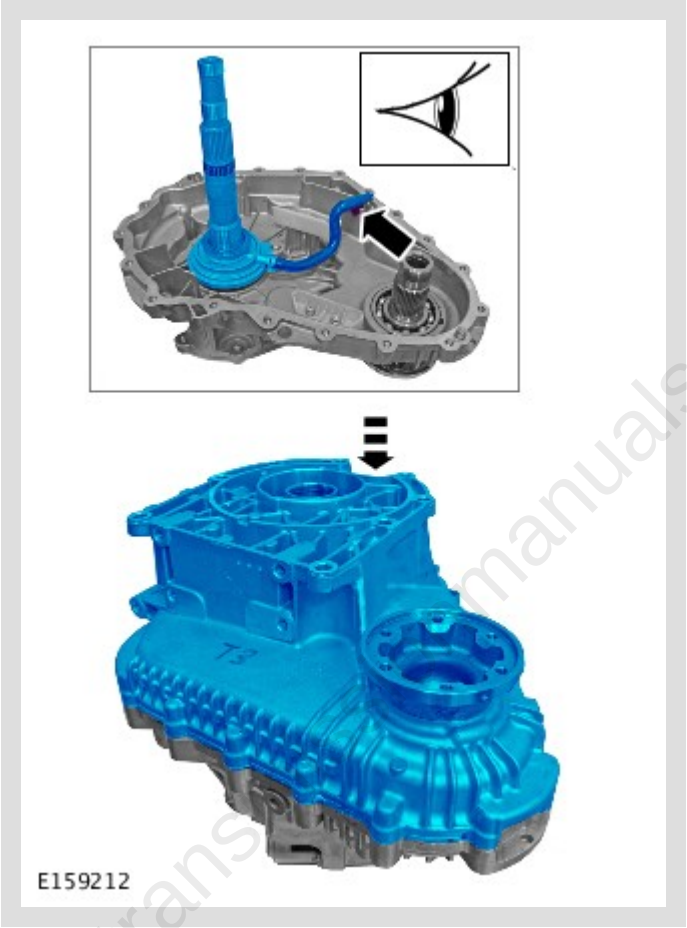

Install the front half of the transfer case.

14.

CAUTION:

Care must be taken when turning the transfer case over. The transfer case halves must not be allowed to separate.

With assistance, release the transfer case and secure with its transmission mating face down on a flat surface.

15.

CAUTION:

Only tighten the bolts finger-tight at this stage.

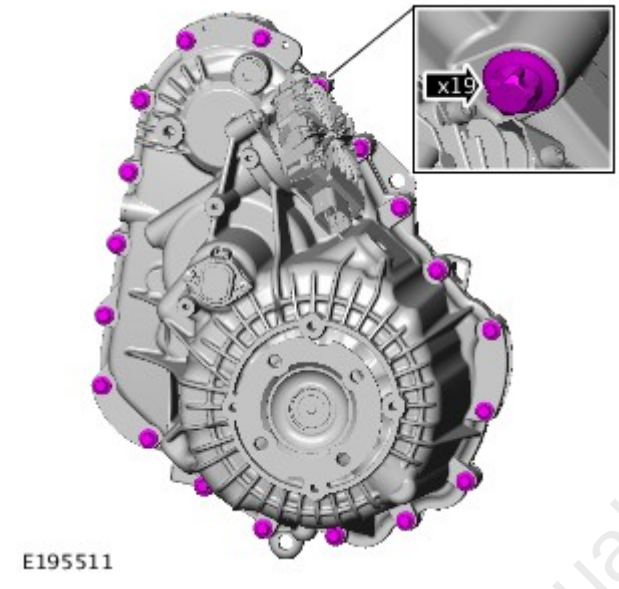

Install the 19 transfer box case bolts.

16.

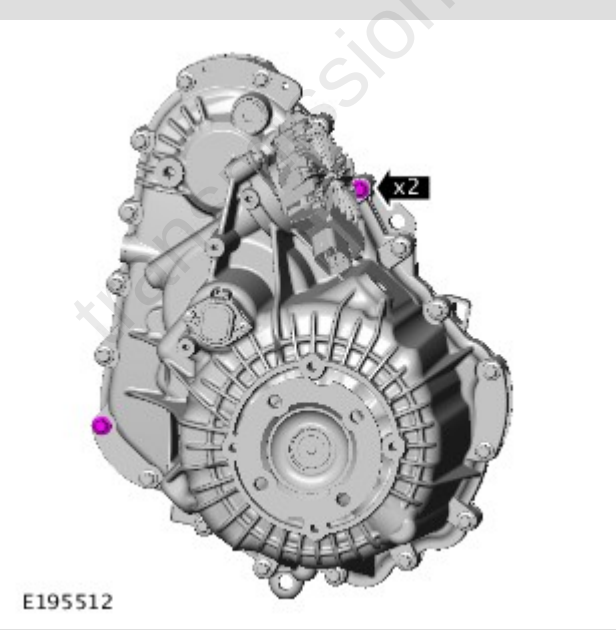

Torque: **10 Nm**

transmissionmanuals.com

17.

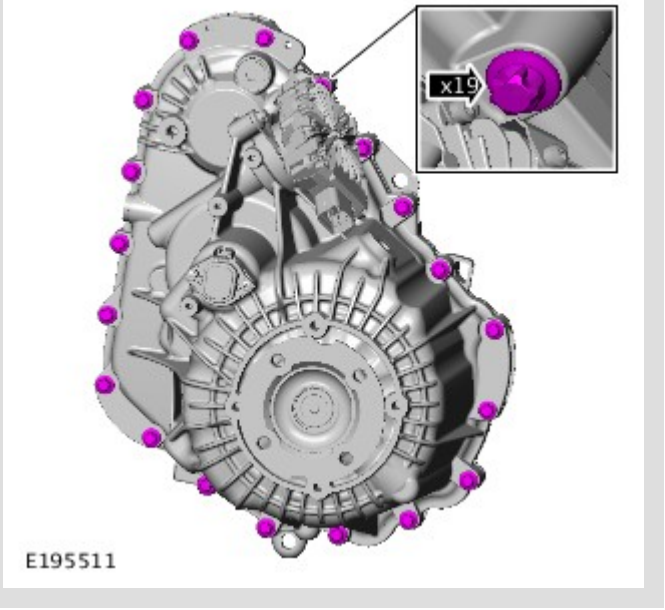

Fully tighten the 19 transfer box case bolts.

Torque: **35 Nm**

18.

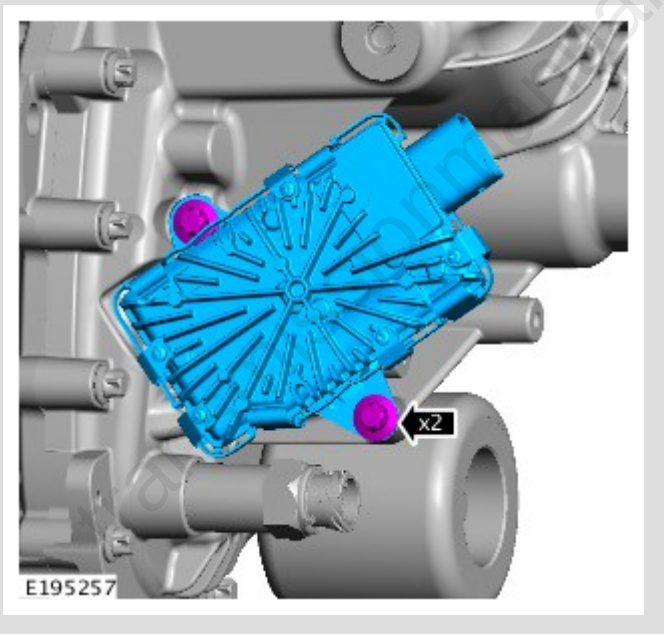

Install the motor.

Torque: **35 Nm**

19.

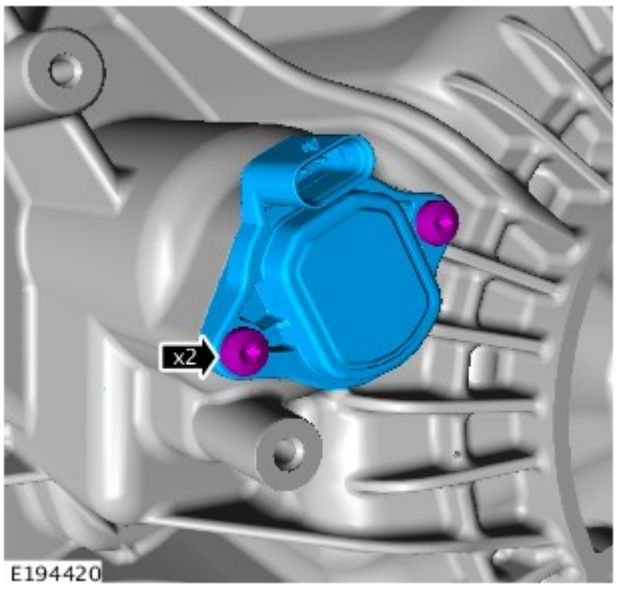

Remove the sensor.

Torque: **5 Nm**

20.

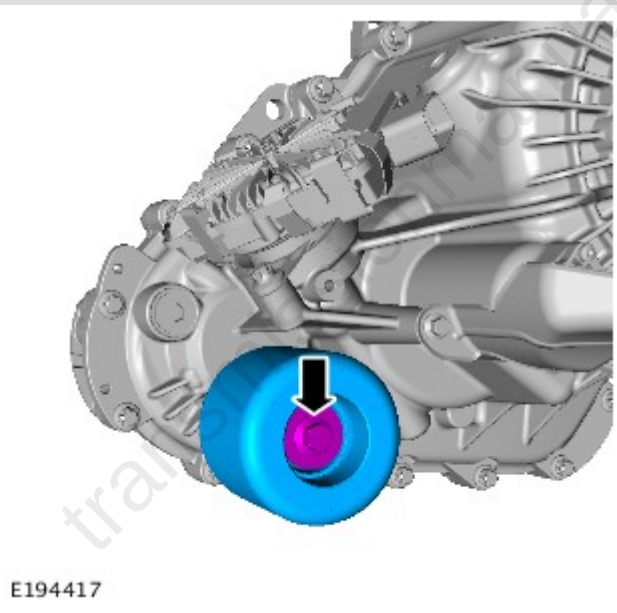

Torque: **75 Nm**

transmissionmanuals.com

21.

NOTE:

This step is only required if previously removed.

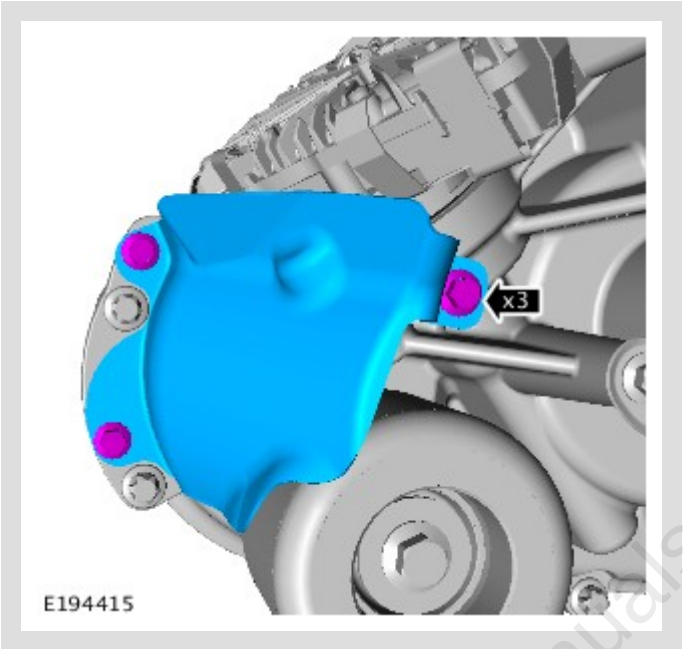

Install the heat shield.

Torque: **8 Nm**

transmissionmanuals.com

22.

NOTE:

This step is only required if previously removed.

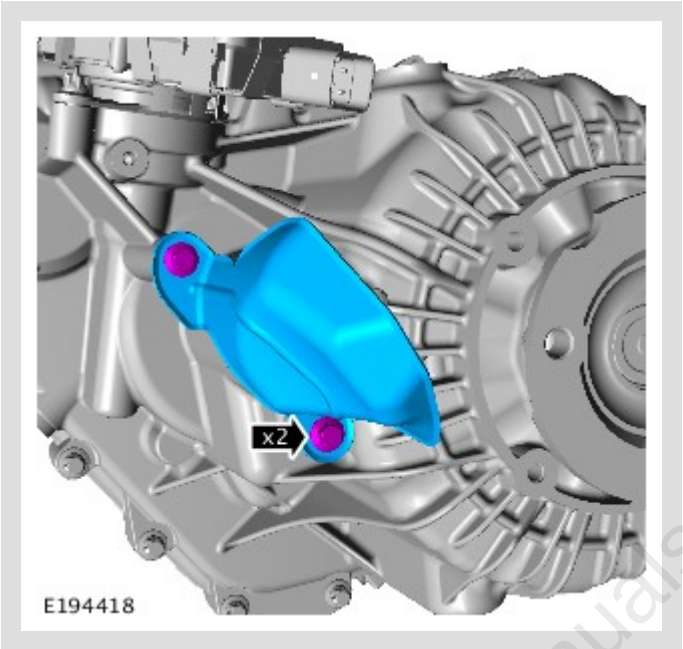

Install the heat shield.
Torque: **8 Nm**

23. With assistance, release the transfer case from the flat surface.

24. Install the transfer case.
Refer to: Transfer Case - V6 S/C 3.0L Petrol (308-07 Transfer Case - [+] Twin Speed Transfer Case, Installation).
Refer to: Transfer Case - TDV6 3.0L Diesel (308-07 Transfer Case - [+] Twin Speed Transfer Case, Installation).
Refer to: Transfer Case - INGENIUM I4 2.0L Diesel (308-07 Transfer Case - [+] Twin Speed Transfer Case, Installation).

25. Connect the battery ground cable.
Refer to: Specifications (414-00 Battery and Charging System - General Information, Specifications).

transmissionmanuals.com

26.

- Using the approved Land Rover diagnostic equipment.
  General Equipment: Land Rover diagnostic equipment
- Start the diagnostic service function "transfer case-transfer case control module replacement".
- Start the service function "transfer case-absolute position sensor replacement".
- Clear any Diagnostic Trouble Codes (DTCs) after calibration and check for correct operation.

transmissionmanuals.com

PUBLISHED: 15-AUG-2016
2022.0 DEFENDER (LE), 308-07

TRANSFER CASE - [+] SINGLE SPEED TRANSFER CASE

TRANSFER CASE REAR OUTPUT SHAFT BEARING (G1947975)

REMOVAL AND INSTALLATION

41.20.19	BEARING - REAR OUTPUT SHAFT - RENEW	3000 CC, TDV6, SINGLE SPEED TRANSFER CASE, WITH PARTICULATE FILTER, WITH DIESEL EXHAUST FLUID	5.4	USED WITHINS	
41.20.19	BEARING - REAR OUTPUT SHAFT - RENEW	3000 CC, TDV6, SINGLE SPEED TRANSFER CASE, WITH PARTICULATE FILTER, WITHOUT DIESEL EXHAUST FLUID	4.6	USED WITHINS	
41.20.19	BEARING - REAR OUTPUT SHAFT - RENEW	3000 CC, TDV6, TWIN SPEED TRANSFER CASE, WITH PARTICULATE FILTER,	5.9	USED WITHINS	

		WITH DIESEL EXHAUST FLUID			
41.20.19	BEARING - REAR OUTPUT SHAFT - RENEW	3000 CC, TDV6, TWIN SPEED TRANSFER CASE, WITH PARTICULATE FILTER, WITHOUT DIESEL EXHAUST FLUID	5.2	USED WITHINS	

SPECIAL TOOL(S)



204-525-1

Replacer, Drive Flange



205-726

Remover/Installer, Wheel Hub Bearing

transmissionmanuals.com



308-637

Installer



JLR-308-927

Support Tool, Transfer Case



JLR-308-931

Remover, Transfer Case Flange

transmissionmanuals.com



JLR-308-933

Remover, Transfer Case Flange

transmissionmanuals.com

PART(S)

STEP	PART NAME	QUANTITY
Installation Step 2	Transfer case rear output shaft bearing	1
Installation Step 3	Transfer case rear output shaft oil seal	1
Installation Step 4	Transfer case rear output shaft snap ring	1

REMOVAL

NOTE:

- Some variation in the illustrations may occur, but the essential information is always correct.
- Some components shown removed for clarity.

1. Disconnect the battery ground cable.
Refer to: Specifications (414-00, Specifications).

2. **WARNING:**

Make sure to support the vehicle with axle stands.

Raise and support the vehicle.

3. Drain the transfer case fluid.
Refer to: Transfer Case Draining and Filling (308-07, General Procedures).

4. Remove the transfer case.
Refer to: Transfer Case - TDV6 3.0L Diesel (308-07B, Removal).
Refer to: Transfer Case - V6 S/C 3.0L Petrol (308-07B, Removal).
Refer to: Transfer Case - INGENIUM I4 2.0L Diesel (308-07B, Removal).

5. **CAUTION:**

Make sure the bolt holes are clean and free of foreign materials.

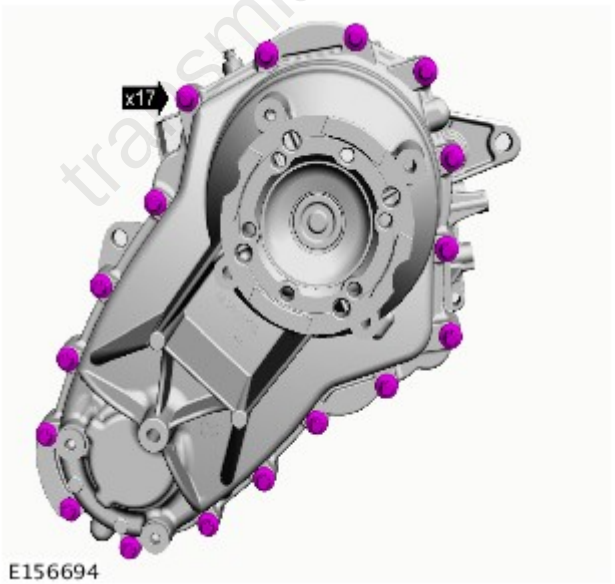

Remove the 17 transfer box case bolts.

transmissionmanuals.com

6.

WARNING:

Eye protection must be worn.

CAUTION:

Care must be taken to avoid damage to the mating surfaces.

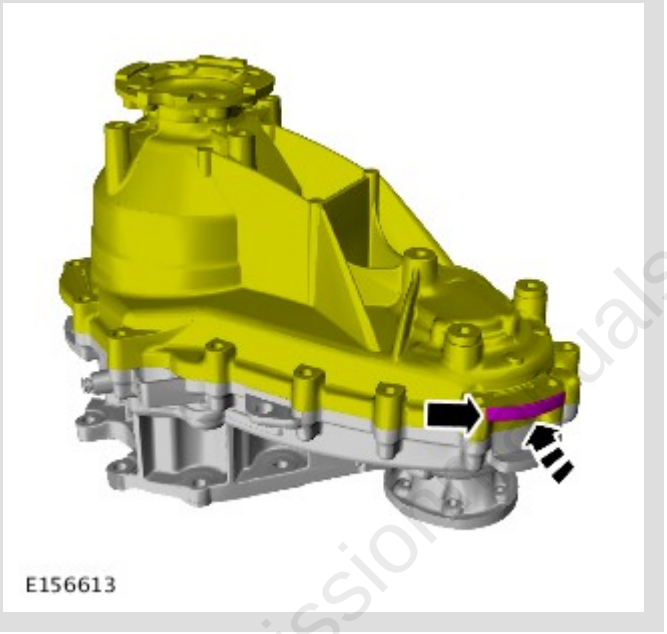

Using a soft faced mallet, release the rear casing.

7.

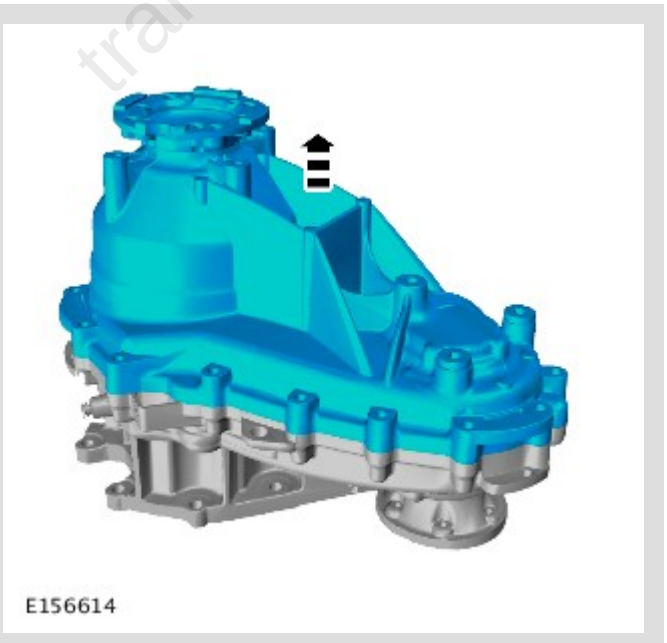

Split the transfer box case.

transmissionmanuals.com

8.

CAUTION:

Make sure that the mating faces are clean and free of foreign material.

Remove the sealant from the transfer case mating faces.

9.

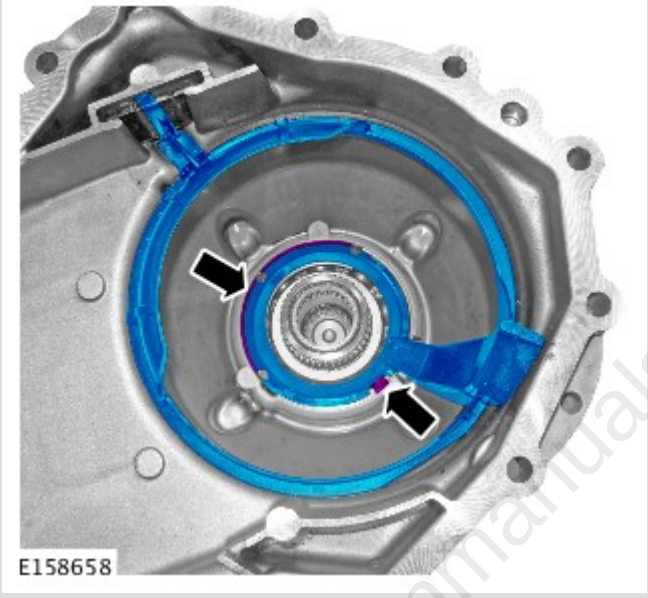

Remove the oil guide assembly.

transmissionmanuals.com

10.

NOTE:

Note the orientation of the component prior to removal.

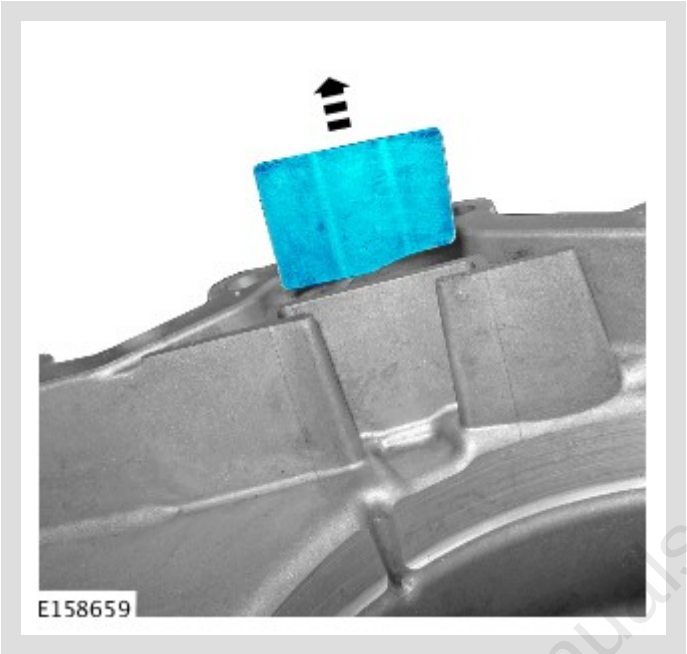

Remove the magnet.

11.



Remove the circlip.

12.



Install the special tool.
Special Tool(s): JLR-308-927

13.

CAUTION:

Make sure that the special tool is correctly located. This will make sure that the snap ring is fully compressed during the next step.

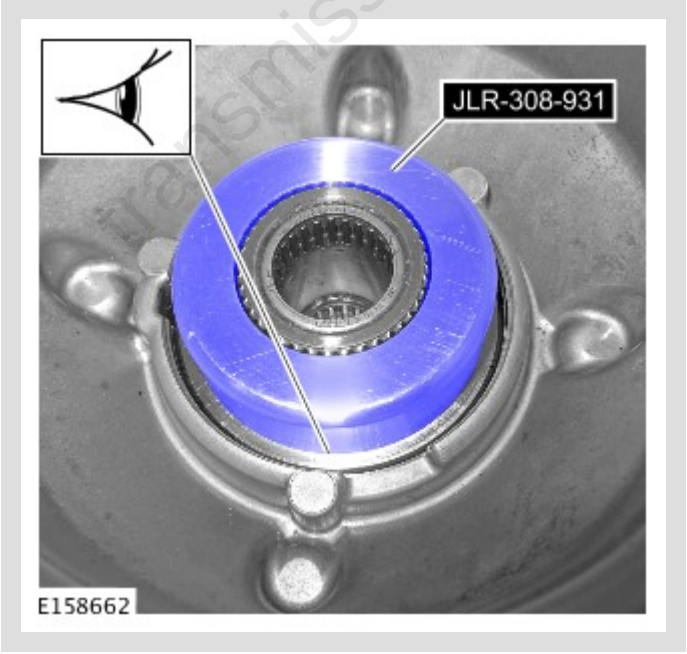

Install the special tool.
Special Tool(s): JLR-308-931

transmissionmanuals.com

14.

CAUTION:

- Do not use excessive force whilst removing the flange assembly.
- Discard the snap ring.

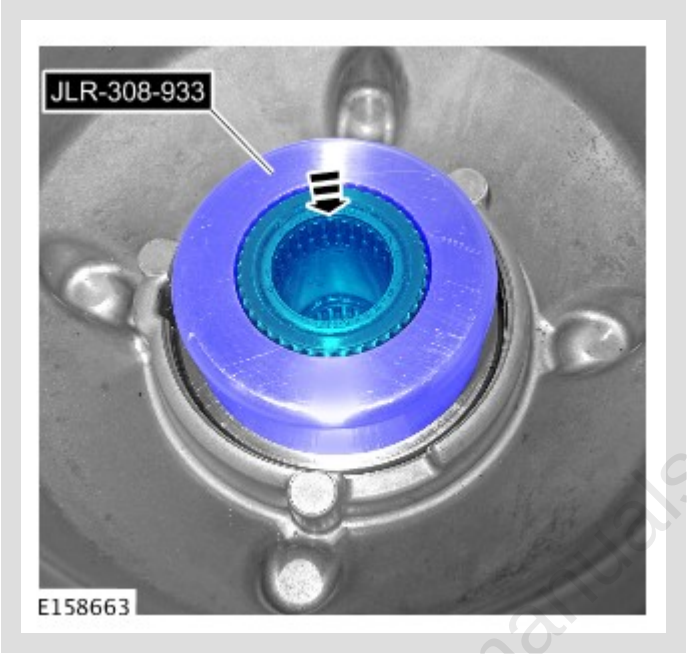

Release the transfer case rear output shaft.
Special Tool(s): JLR-308-933

15.



Remove the seal.

transmissionmanuals.com

16.



Remove the bearing.

INSTALLATION

1.

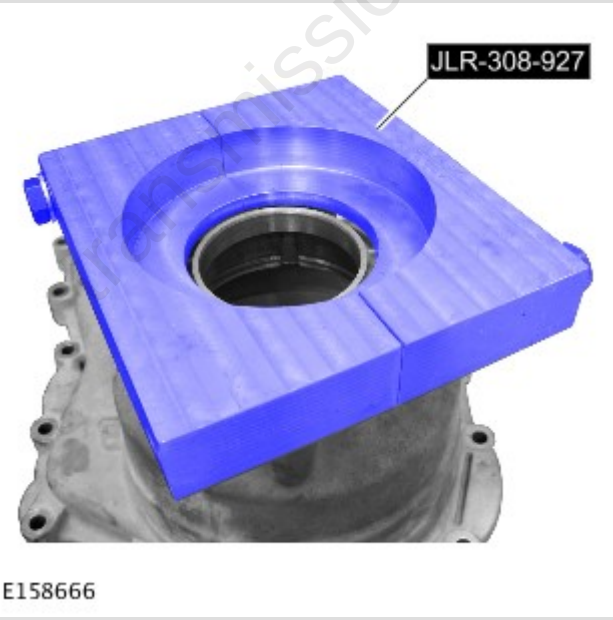

Position the special tool as shown, to support the transfer case during the next step.
Special Tool(s): JLR-308-927

transmissionmanuals.com

2.

CAUTION:

The chamfer on the bearing inner track must face the seal.



- Install the bearing.
  Special Tool(s): 205-726
- *Renew Part: Transfer case rear output shaft bearing Quantity: 1 .*

transmissionmanuals.com

3.



- Install the seal.
  Special Tool(s): 308-637
- *Renew Part: Transfer case rear output shaft oil seal Quantity: 1 .*

4.



- Centralize the snap ring in the snap ring groove before installing the output flange.
- Extreme care is necessary to make sure the snap ring enters the bearing squarely.
- Install a new snap ring.
- Using the special tool and with assistance, install the drive flange.
  Special Tool(s): 204-525-1
- *Renew Part: Transfer case rear output shaft snap ring Quantity: 1 .*

5.

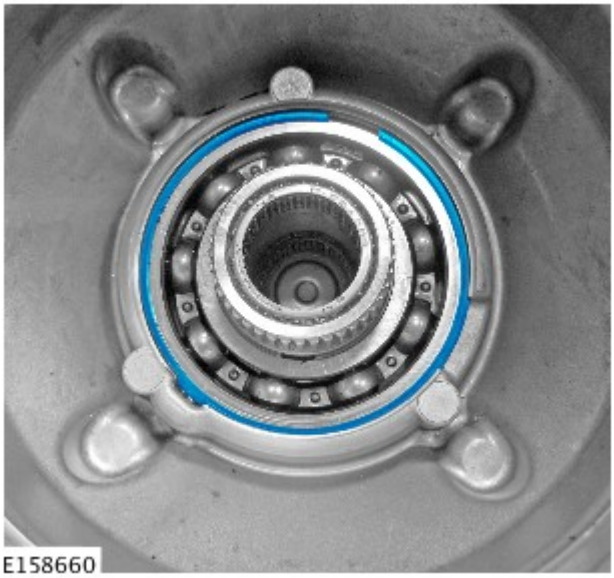

Install the circlip.

transmissionmanuals.com

6.

CAUTION:

Make sure that the component is clean and free of foreign material .

NOTE:

Make sure that the component is installed to the noted removal position.

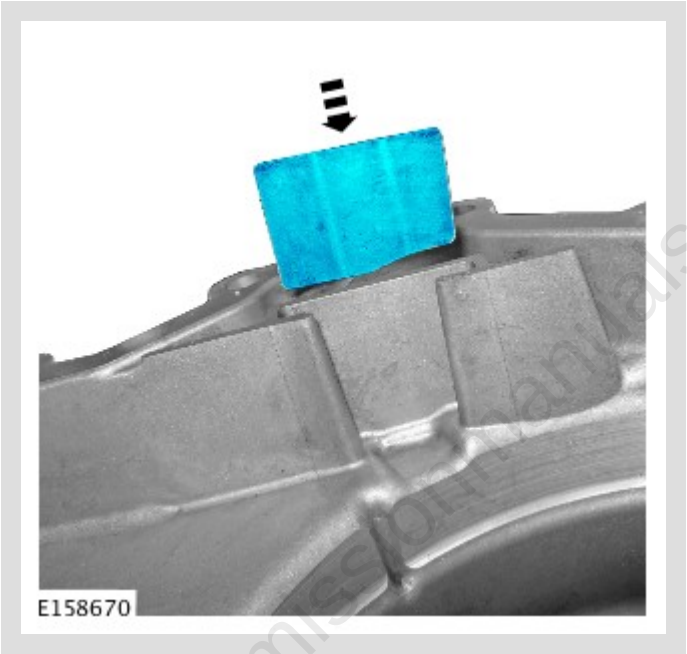

Install the magnet.

transmissionmanuals.com

7.

CAUTION:

Make sure that the retaining tangs are installed correctly.

NOTE:

Make sure that the component is correctly installed.

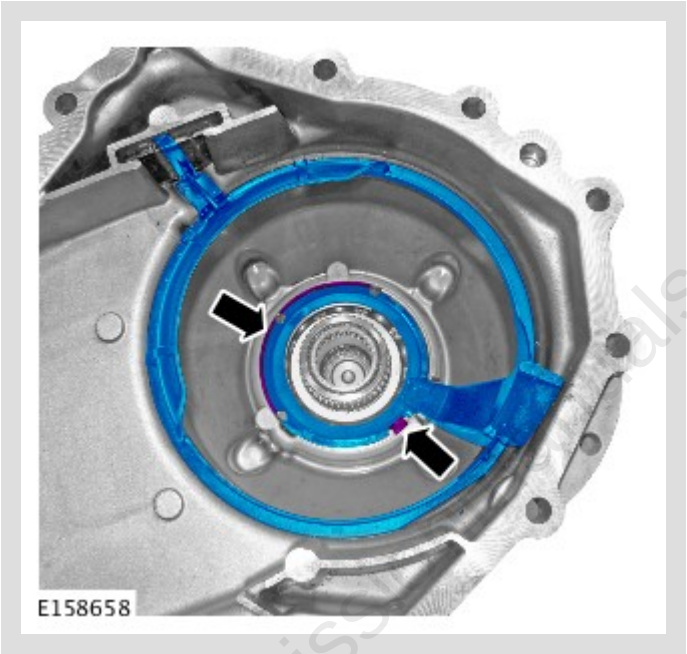

Install the oil guide assembly.

transmissionmanuals.com

8.

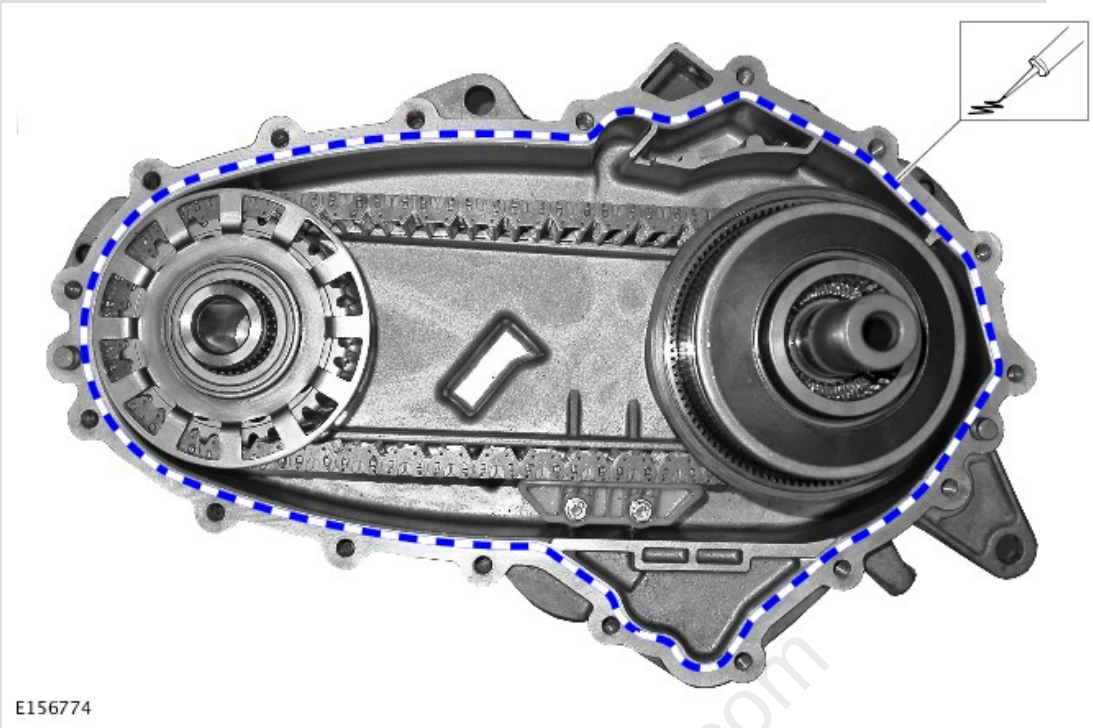

Apply a 2 mm bead of sealant to one surface of the transfer case mating face, as shown.
Refer to: Specifications (308-07A, Specifications).

9.

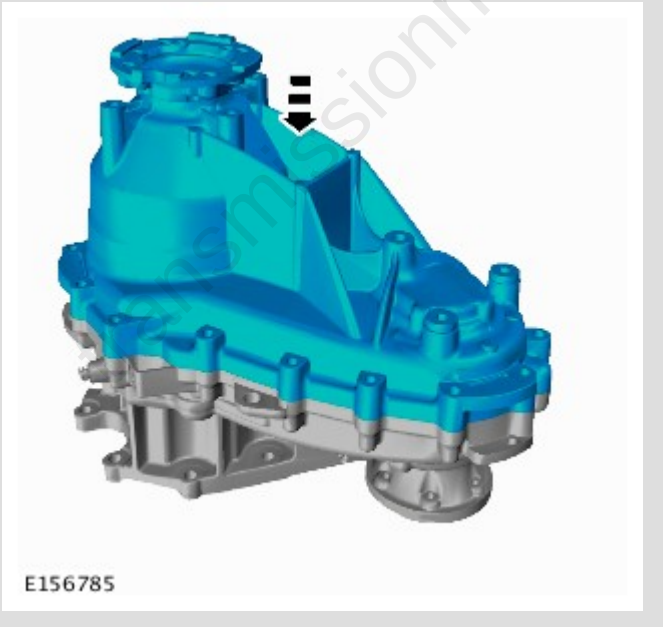

transmissionmanuals.com

10.

CAUTION:

Only tighten the bolts finger-tight at this stage.

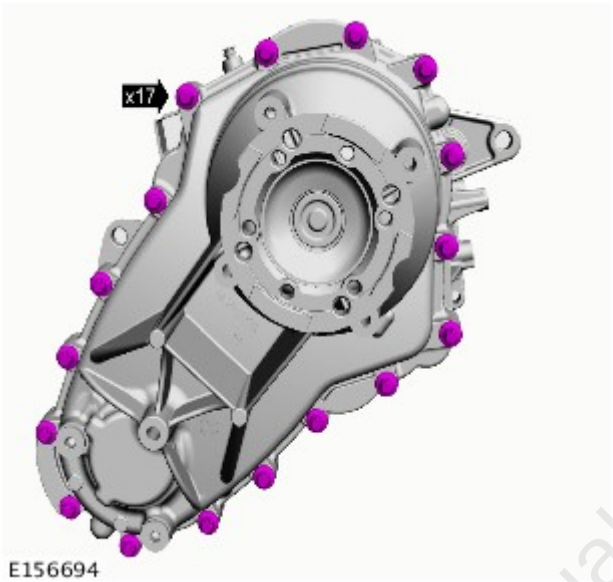

Install the 17 transfer box case bolts.

11.



Torque: **10 Nm**

transmissionmanuals.com

12.

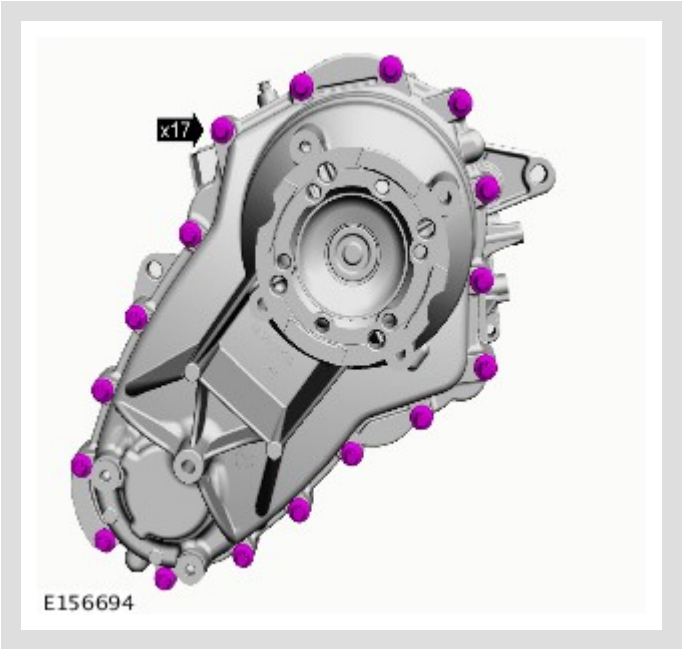

Torque: **35 Nm**

13. Install the transfer case.
Refer to: Transfer Case - TDV6 3.0L Diesel (308-07B, Installation).
Refer to: Transfer Case - V6 S/C 3.0L Petrol (308-07B, Installation).
Refer to: Transfer Case - INGENIUM I4 2.0L Diesel (308-07B, Installation).

14. Fill the transfer case with the recommended fluid.
Refer to: Transfer Case Draining and Filling (308-07, General Procedures).

15. Connect the battery ground cable.
Refer to: Specifications (414-00, Specifications).

transmissionmanuals.com

PUBLISHED: 16-AUG-2017
2022.0 DEFENDER (LE), 308-07

TRANSFER CASE - [+] TWIN SPEED TRANSFER CASE

TRANSFER CASE REAR OUTPUT SHAFT BEARING (G1947977)

REMOVAL AND INSTALLATION

41.20.19	BEARING - REAR OUTPUT SHAFT - RENEW	3000 CC, TDV6, SINGLE SPEED TRANSFER CASE, WITH PARTICULATE FILTER, WITH DIESEL EXHAUST FLUID	5.4	USED WITHINS	
41.20.19	BEARING - REAR OUTPUT SHAFT - RENEW	3000 CC, TDV6, SINGLE SPEED TRANSFER CASE, WITH PARTICULATE FILTER, WITHOUT DIESEL EXHAUST FLUID	4.6	USED WITHINS	
41.20.19	BEARING - REAR OUTPUT SHAFT - RENEW	3000 CC, TDV6, TWIN SPEED TRANSFER CASE, WITH PARTICULATE FILTER,	5.9	USED WITHINS	

		WITH DIESEL EXHAUST FLUID			
41.20.19	BEARING - REAR OUTPUT SHAFT - RENEW	3000 CC, TDV6, TWIN SPEED TRANSFER CASE, WITH PARTICULATE FILTER, WITHOUT DIESEL EXHAUST FLUID	5.2	USED WITHINS	

SPECIAL TOOL(S)



204-525-1

Replacer, Drive Flange



205-726

Remover/Installer, Wheel Hub Bearing

transmissionmanuals.com



308-637

Installer



JLR-308-927

Support Tool, Transfer Case

transmissionmanuals.com

PART(S)

STEP	PART NAME	QUANTITY
Installation Step 2	Transfer case rear output shaft bearing	1

REMOVAL

NOTE:

- Some variation in the illustrations may occur, but the essential information is always correct.
- Some components shown removed for clarity.

1. Disconnect the battery ground cable.
   Refer to: Specifications (414-00 Battery and Charging System - General Information, Specifications).

2. **WARNING:**

   Make sure to support the vehicle with axle stands.

   Raise and support the vehicle.

3. Remove the transfer case.
   Refer to: Transfer Case - V6 S/C 3.0L Petrol (308-07 Transfer Case - [+] Twin Speed Transfer Case, Removal).
   Refer to: Transfer Case - TDV6 3.0L Diesel (308-07 Transfer Case - [+] Twin Speed Transfer Case, Removal).
   Refer to: Transfer Case - INGENIUM I4 2.0L Diesel (308-07 Transfer Case - [+] Twin Speed Transfer Case, Removal).

4. With assistance, secure the transfer case with its transmission mating face down on a flat surface.

transmissionmanuals.com

5.

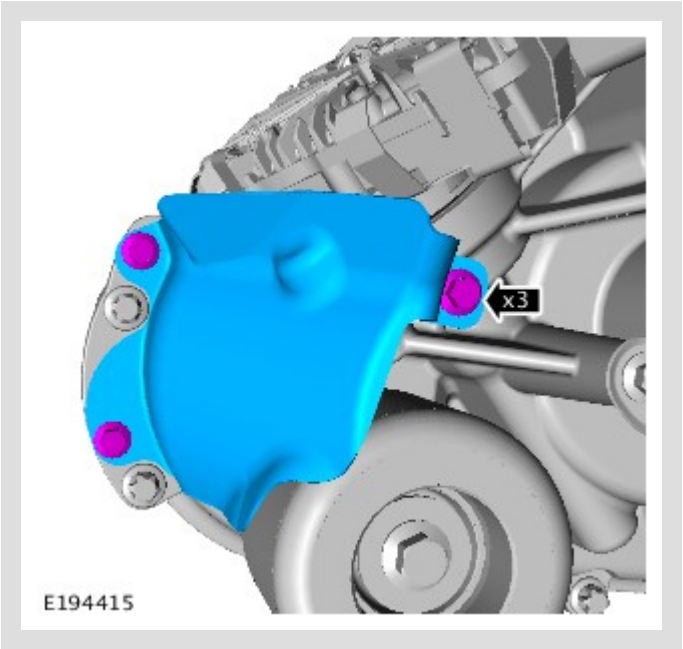

If equipped, remove the heat shield.

6.

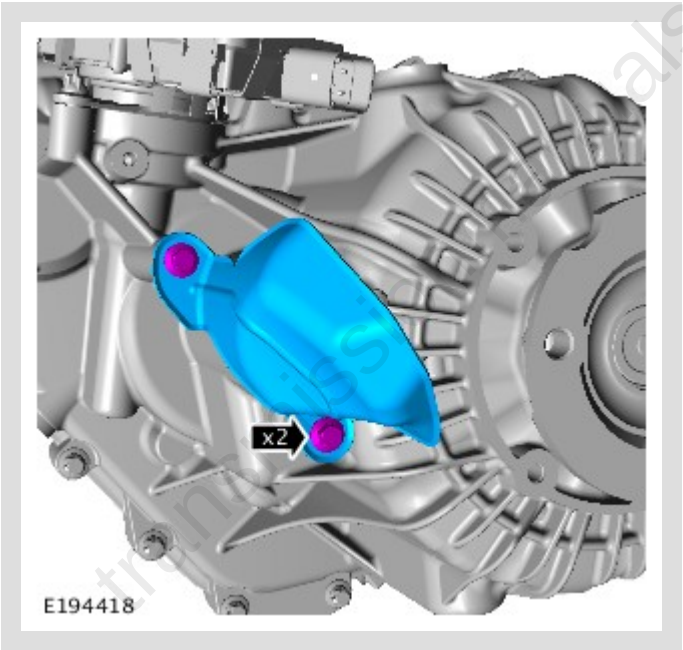

If equipped, remove the heat shield.

7.

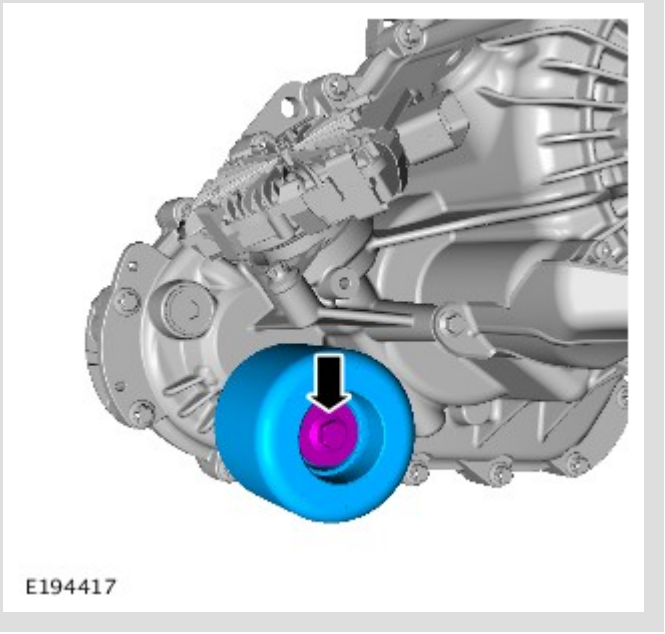

Remove the damper.

8.

CAUTION:

Make sure the bolt holes are clean and free of swarf.

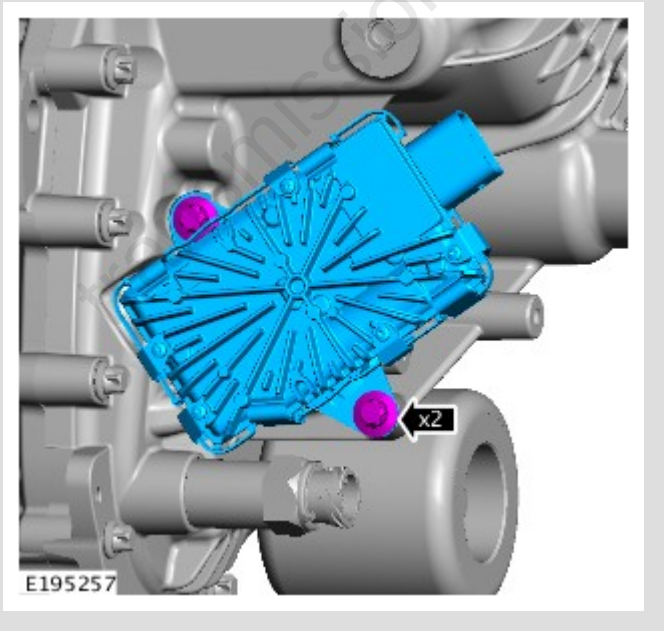

Remove the motor.

transmissionmanuals.com

9.

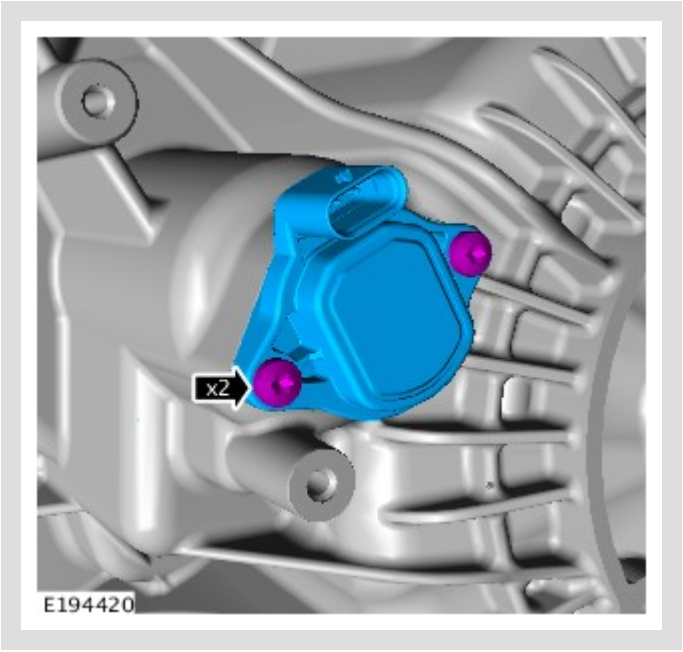

Remove the sensor.

10.

CAUTION:

Make sure the bolt holes are clean and free of swarf.

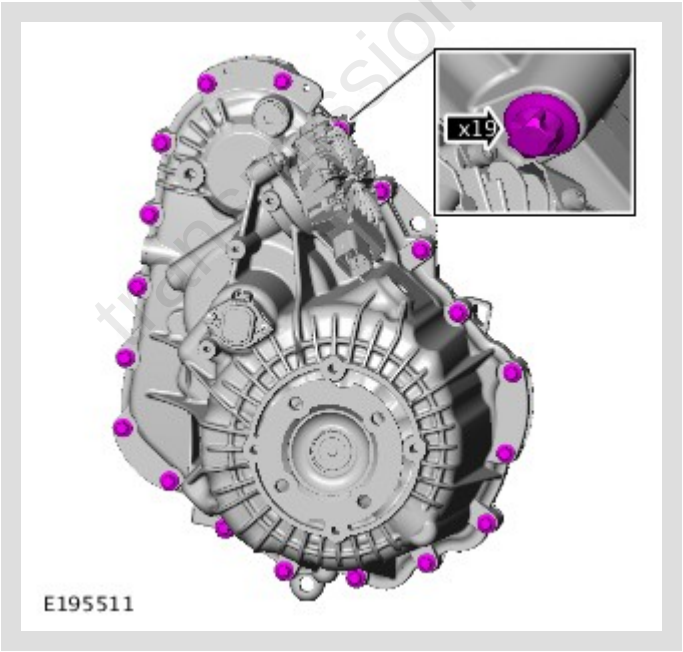

Remove the 19 transfer box case bolts.

transmissionmanuals.com

11.

CAUTION:

Care must be taken when turning the transfer case over. The transfer case halves must not be allowed to separate.

With assistance, release the transfer case and secure with the rear face of the transfer case facing down on a flat surface.

12.

CAUTION:

Care must be taken to avoid damage to the mating surfaces.

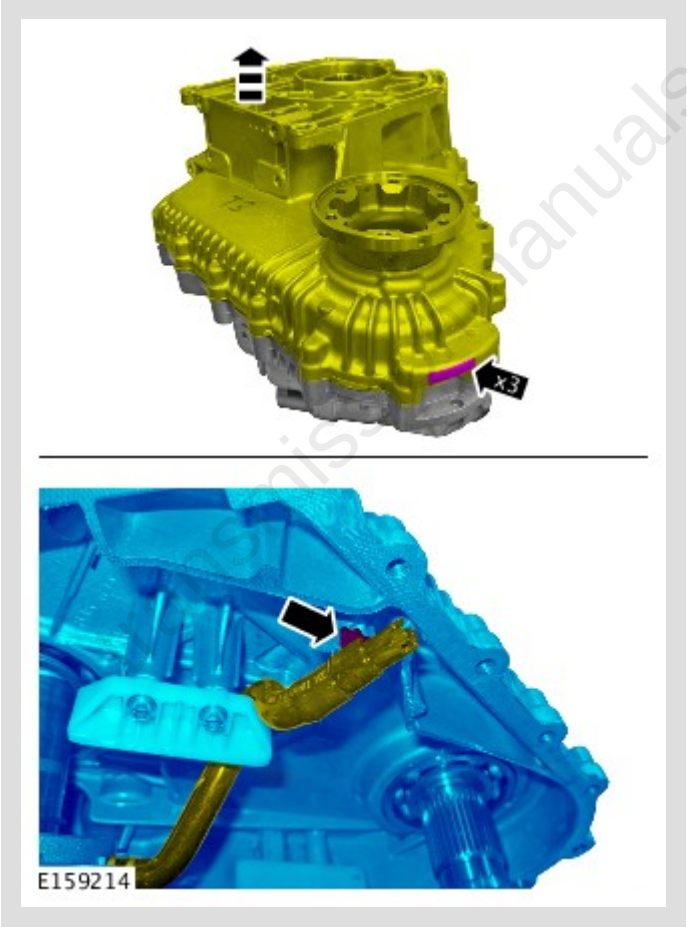

Using a soft faced mallet, release the front casing.

13. Remove the sealant from the transfer case mating faces.

14.

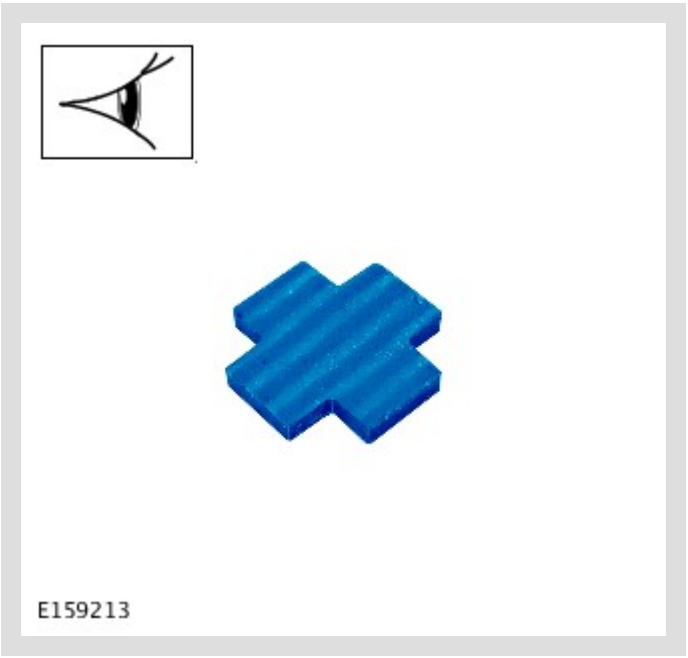

Locate the magnetic filter. The filter may have dropped into the front housing in the previous step.

15.

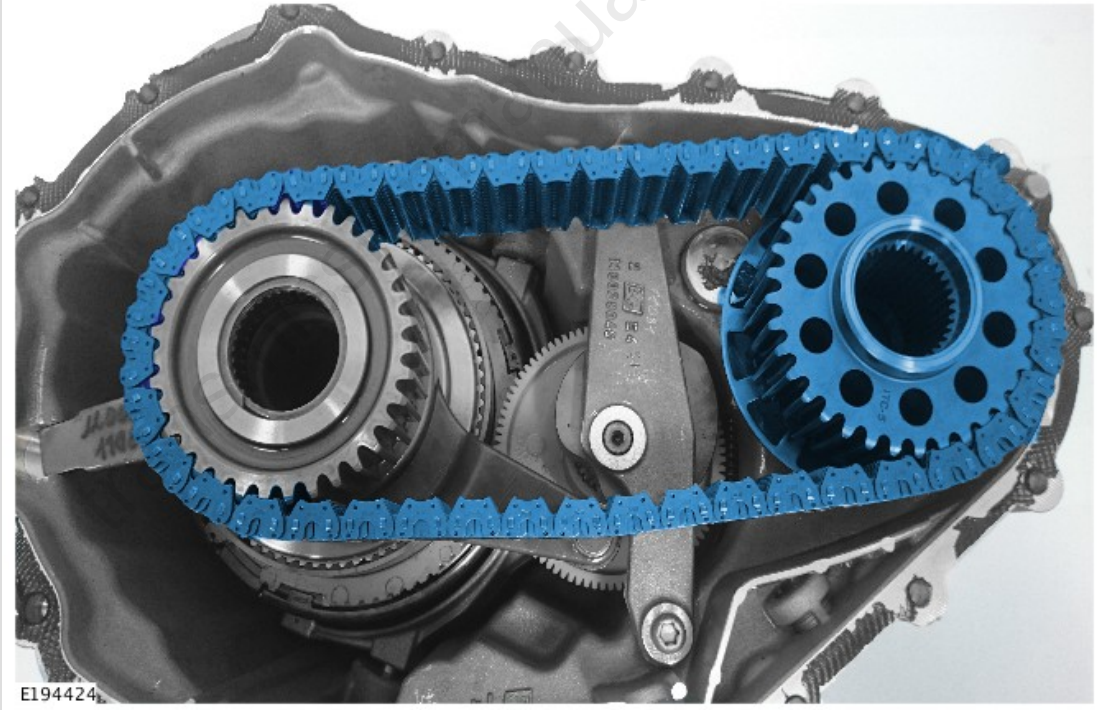

Remove the transfer case chain assembly.

16.



17.

CAUTION:

Note the fitted position of the component prior to removal.

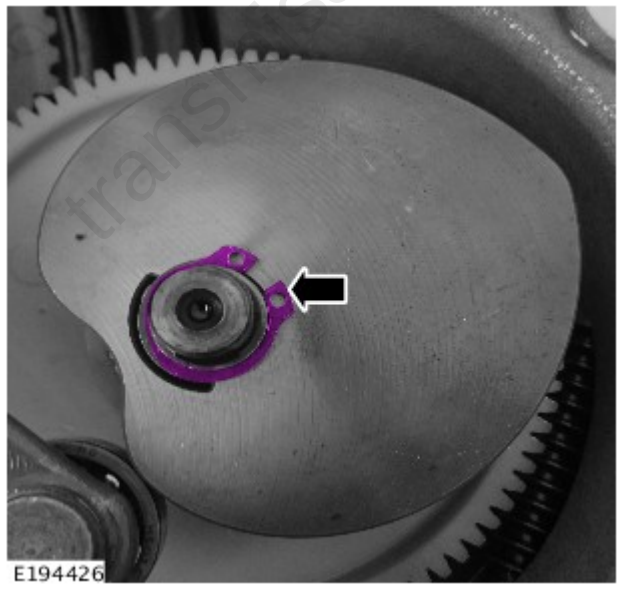

Remove and discard the circlip.

18.

CAUTION:

Note the fitted position of the component prior to removal.

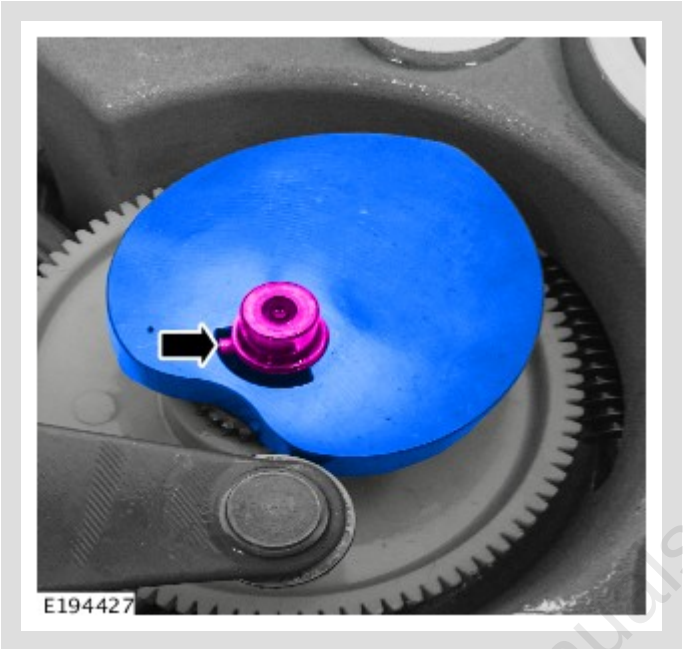

19.

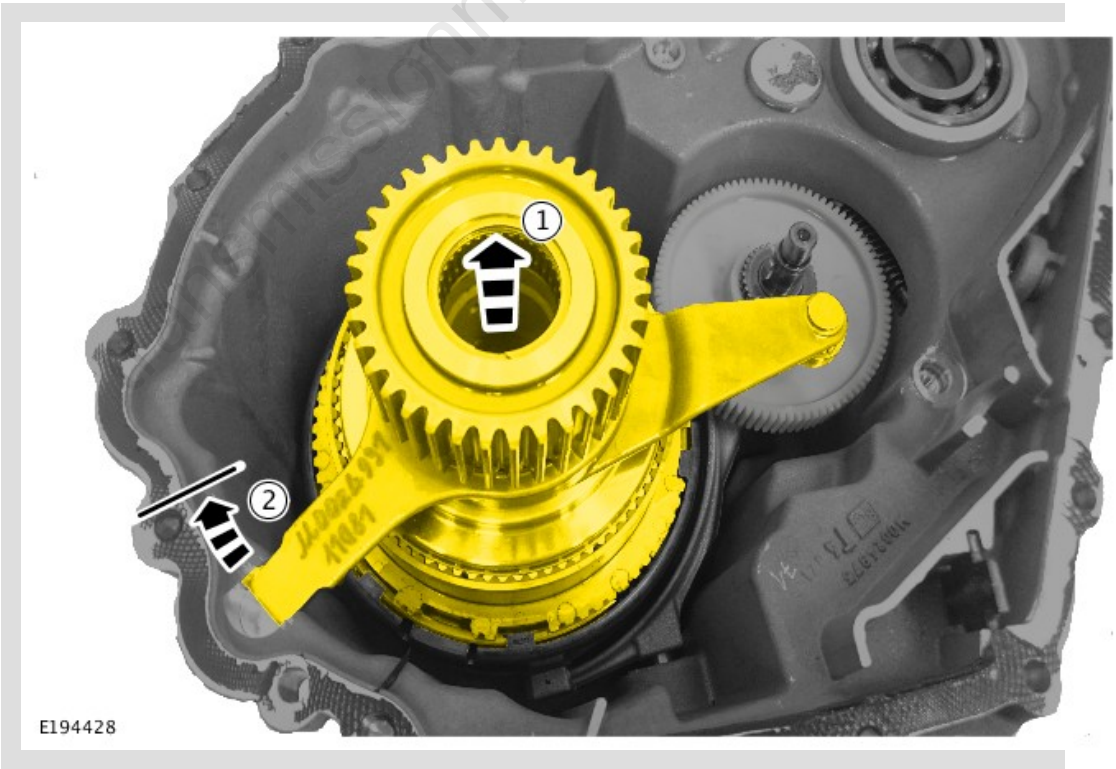

Raise and rotate the transfer differential assembly to the position shown in the illustration.

mitsubishimanuals.com

20.

CAUTION:

Note the fitted position of the component prior to removal.



Remove and discard the circlip.

21.

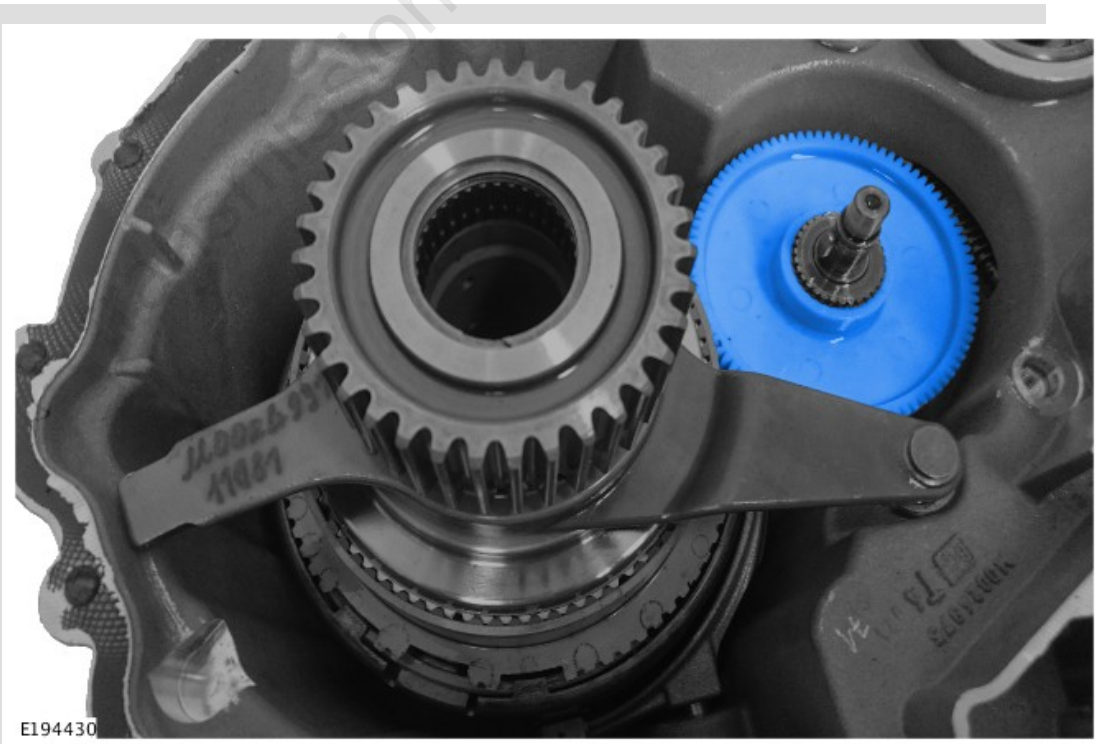

Remove the gear assembly.

22.



Remove the transfer differential assembly.

23.

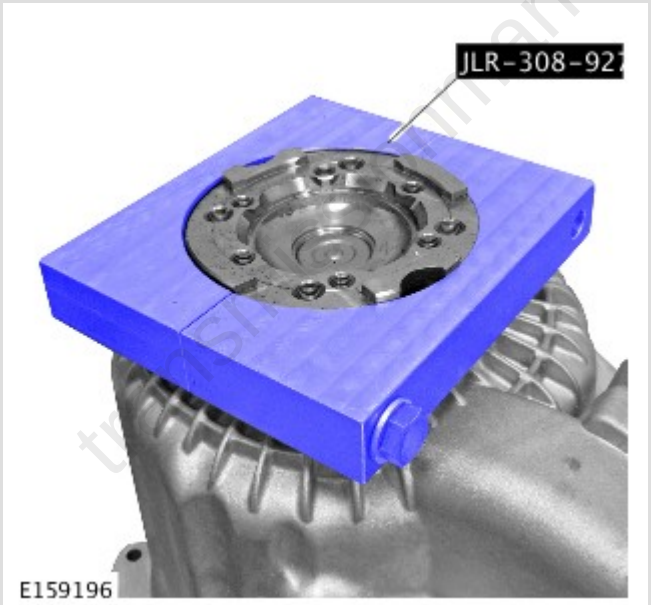

Install the special tool.

Special Tool(s): JLR-308-927

24.

CAUTION:

Note the fitted position of the component prior to removal.

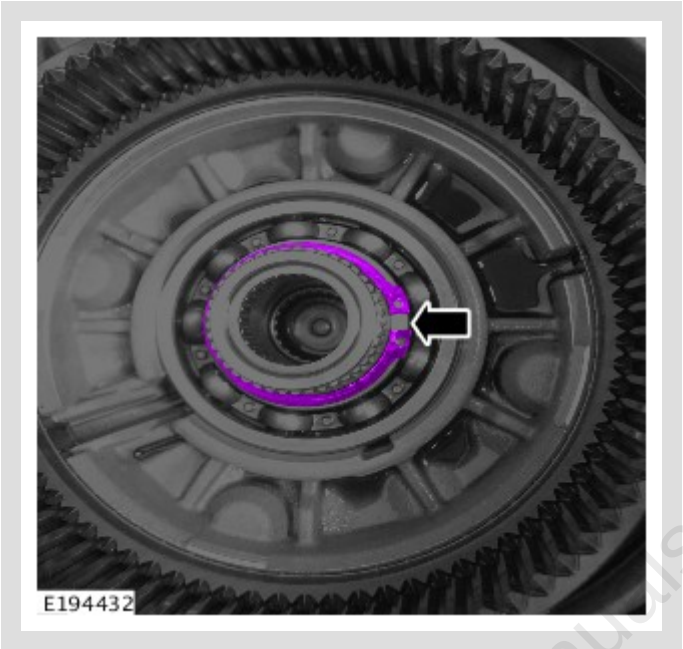

Remove and discard the circlip.

transmissionmanuals.com

25.

CAUTION:

Do not use excessive force whilst removing the flange assembly.



Remove the rear output shaft and flange assembly.

26.



Using a suitable tool, remove and discard the oil seal.

vansionmanuals.com

27.

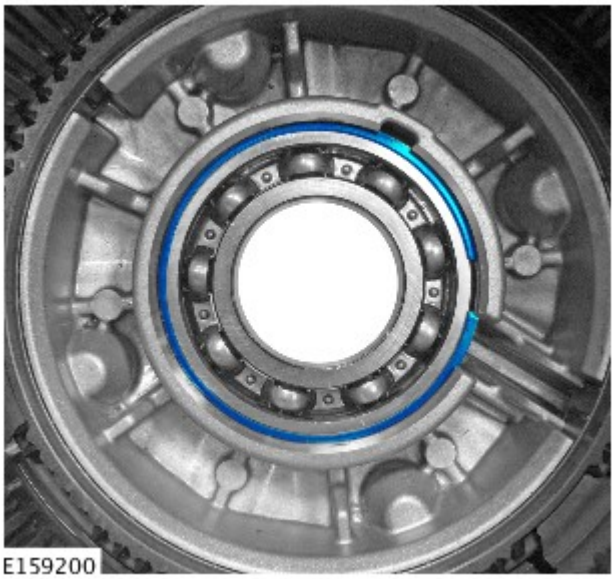

Remove the circlip.

28.

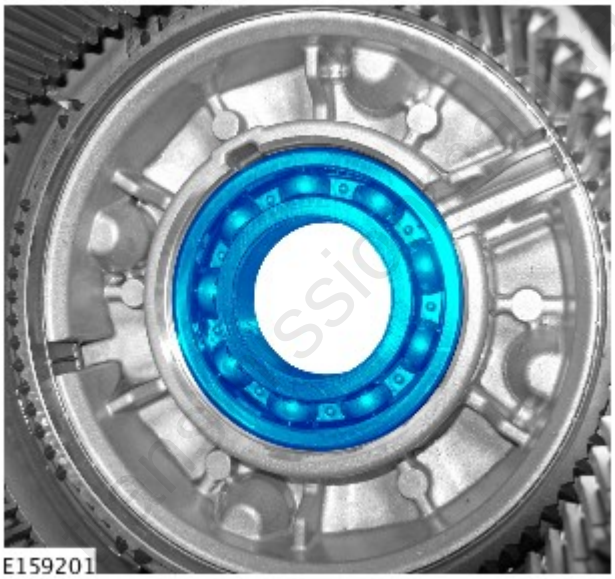

Remove the bearing

INSTALLATION

1.

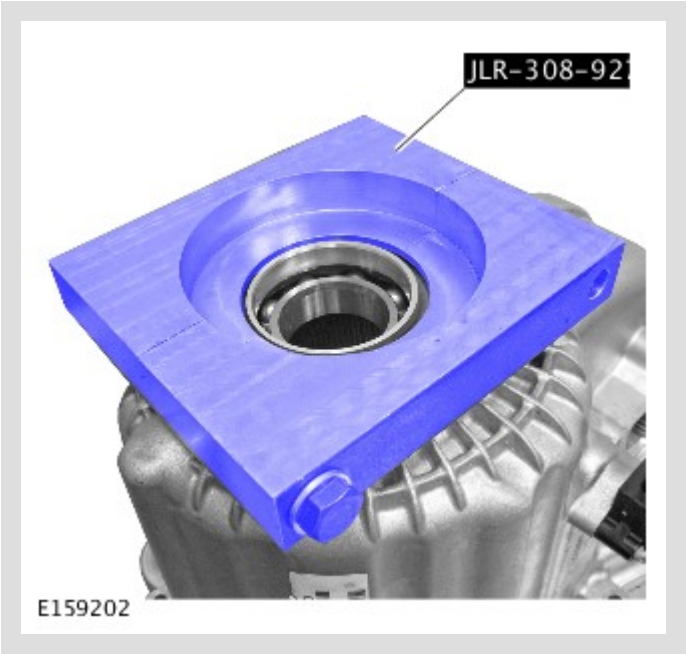

Position the special tool as shown, to support the transfer case during the next step.

Special Tool(s): JLR-308-927

transmissionmanuals.com

2.

CAUTION:

The chamfer on the bearing inner track must face the seal.



- Install the new bearing from the kit.
  Special Tool(s): 205-726
  Renew Part: *Transfer case rear output shaft bearing* *Quantity:* *1* .

transmissionmanuals.com

3.

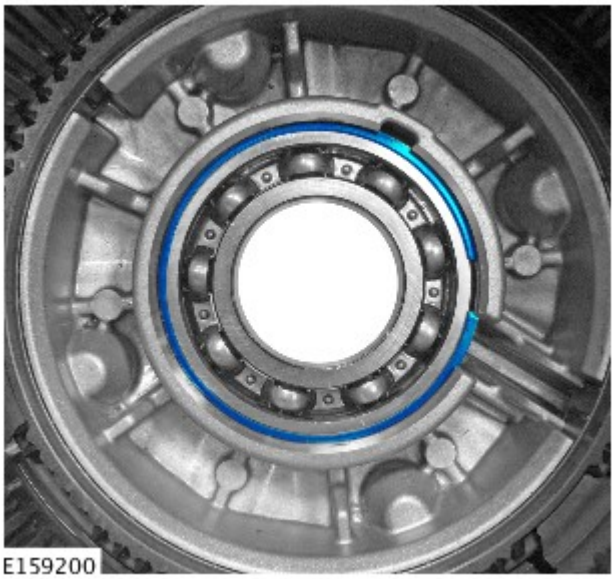

Install the circlip from the baring kit.

4.



- Install the seal from the kit.
  Special Tool(s): 308-637

carmanuals.com

5.



Using the special tool and with assistance, install the drive flange.
Special Tool(s): 204-525-1

6.

NOTE:

Check that the circlip is fully engaged.

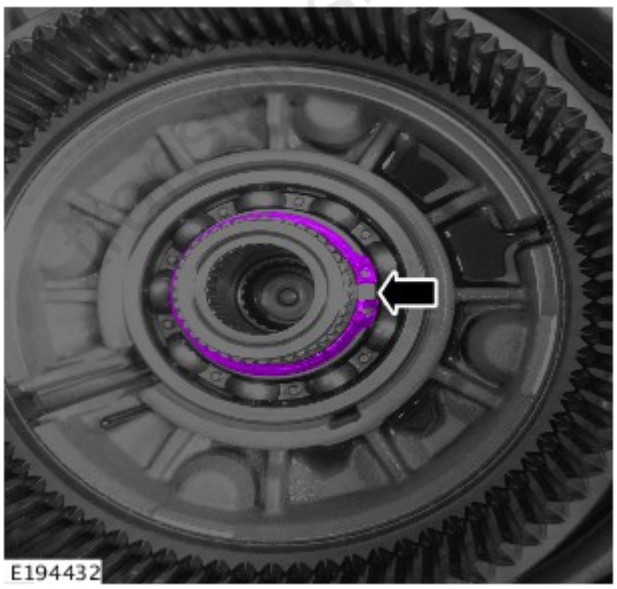

- Install the circlip from the kit.

7.

NOTE:

Rotate the differential to engage the splines.



Install the transfer differential assembly.

8.

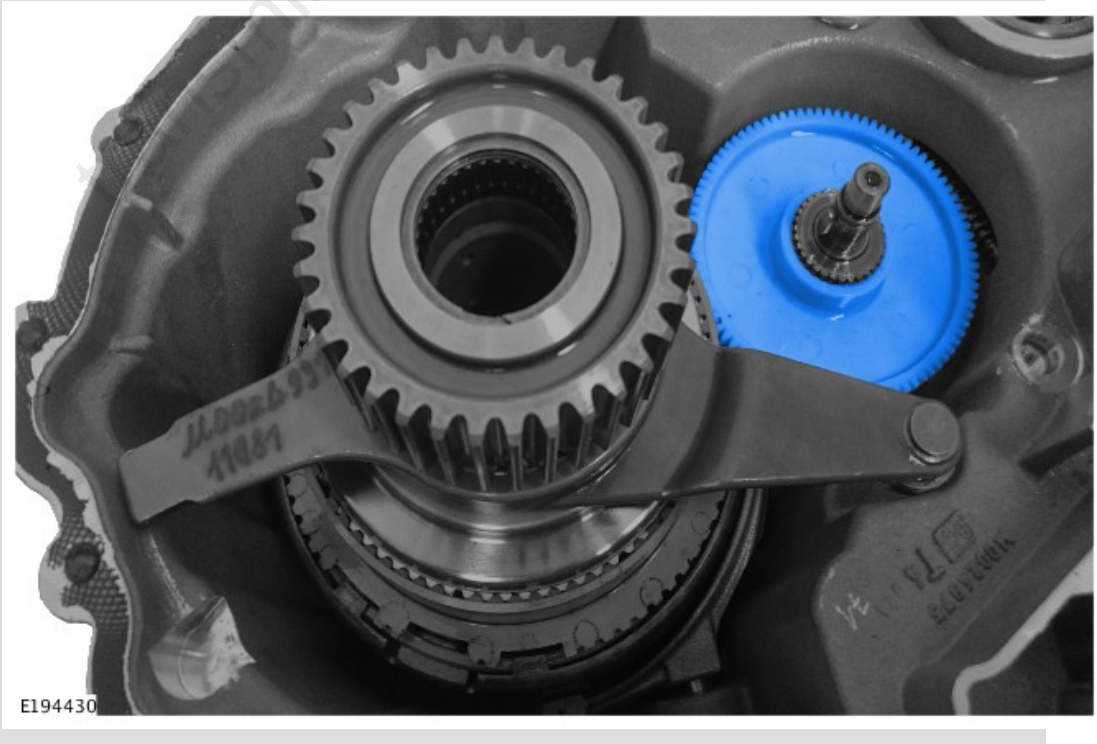

Install the gear assembly.

9.

NOTE:

Check that the circlip is fully engaged.

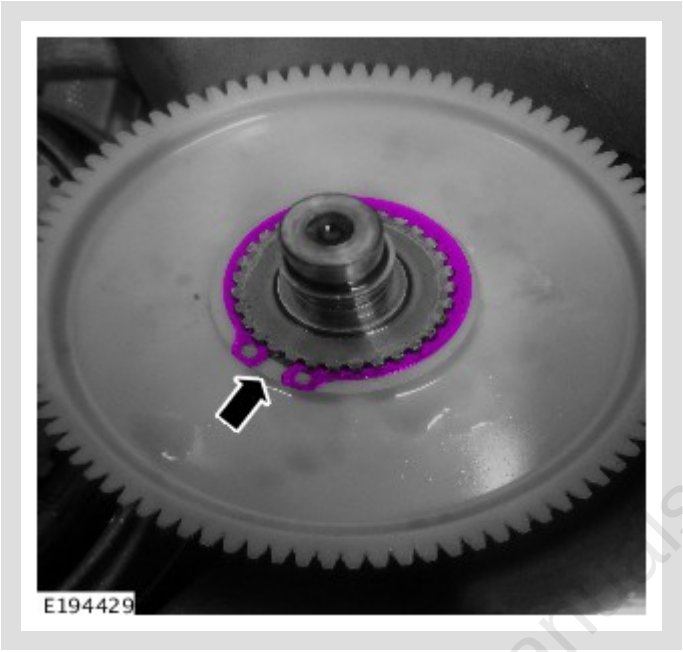

- Install a new circlip.

transmissionmanuals.com

10.

NOTE:

Make sure that the component is installed to the noted removal position.

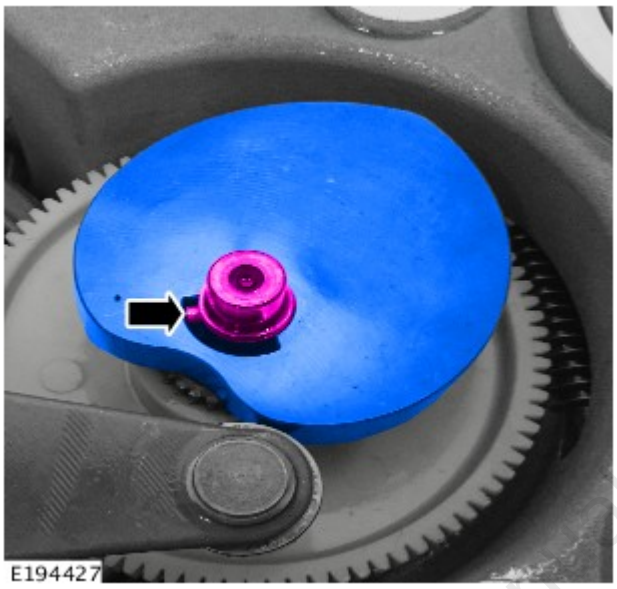

transmissionmanuals.com

11.

NOTE:

Check that the circlip is fully engaged.

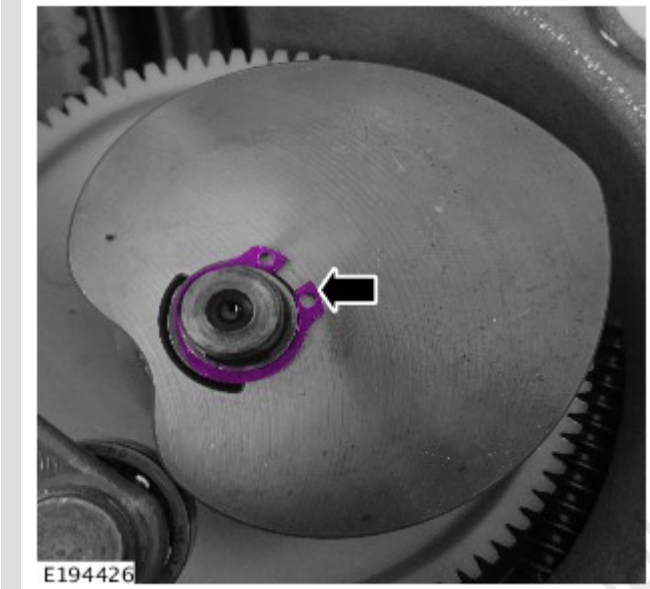

- Install the circlip from the bearing kit.

12.

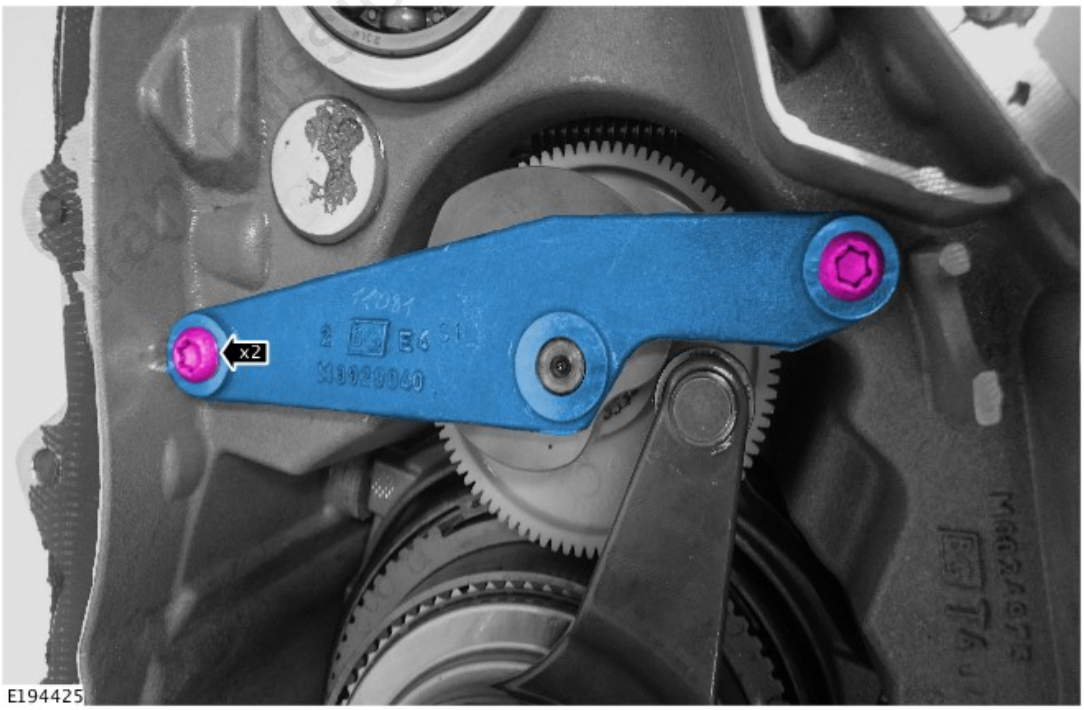

Torque: **15 Nm**

13.

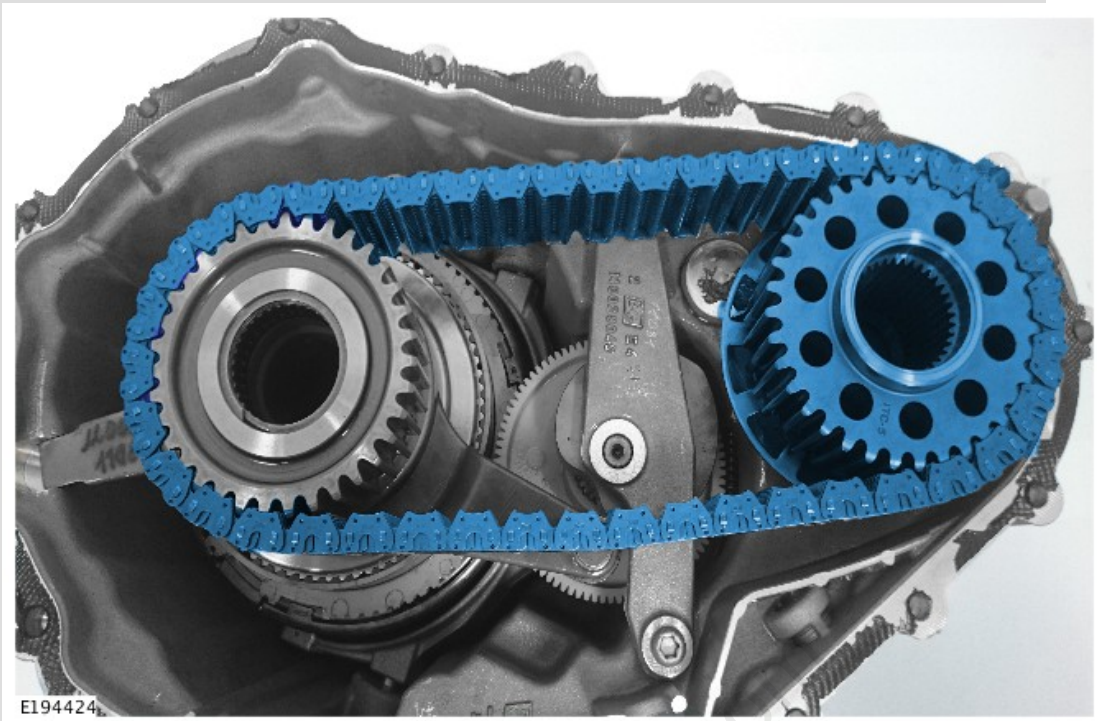

Install the transfer case chain assembly.

14.

CAUTION:

Make sure that the component is clean and free of foreign material .



Install the magnetic filter.

transmissionmanuals.co

15.

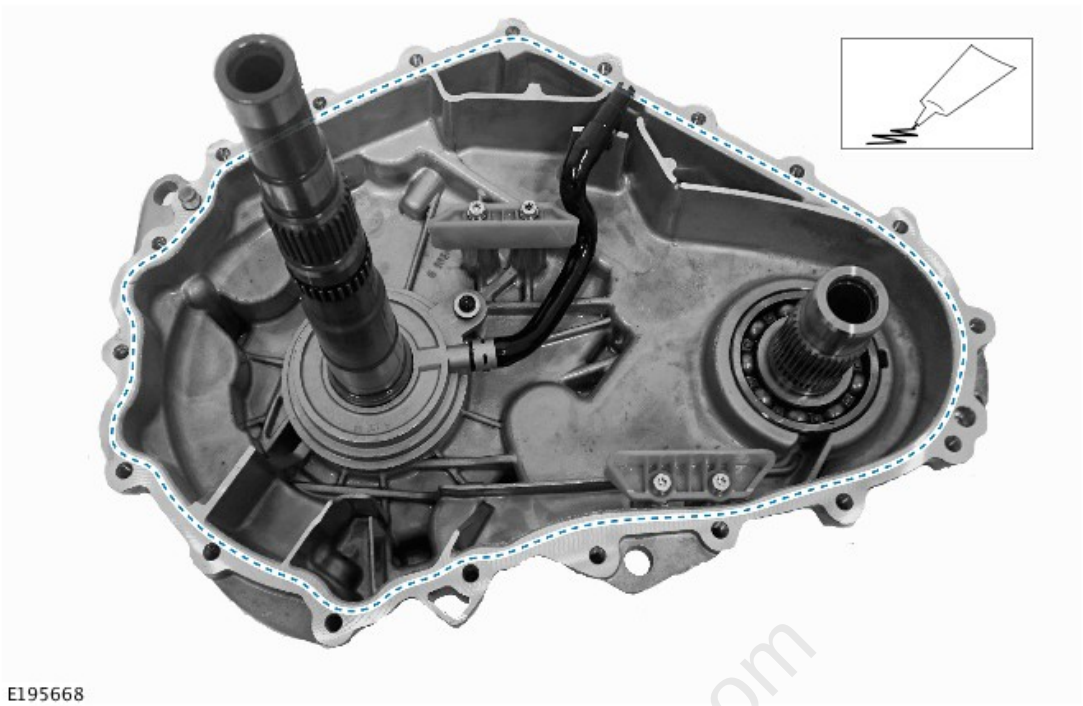

Apply a 2 mm bead of sealant to one surface of the transfer case mating face, as shown.
Refer to: Specifications (308-07 Transfer Case - [+] Twin Speed Transfer Case, Specifications).

transmissionmanuals.com

16.

CAUTION:

- Make sure that the input shaft spacer is located correctly.
- The input shaft and fluid pump assembly must be supported and held in place by hand, until it is located securely into the clutch assembly.

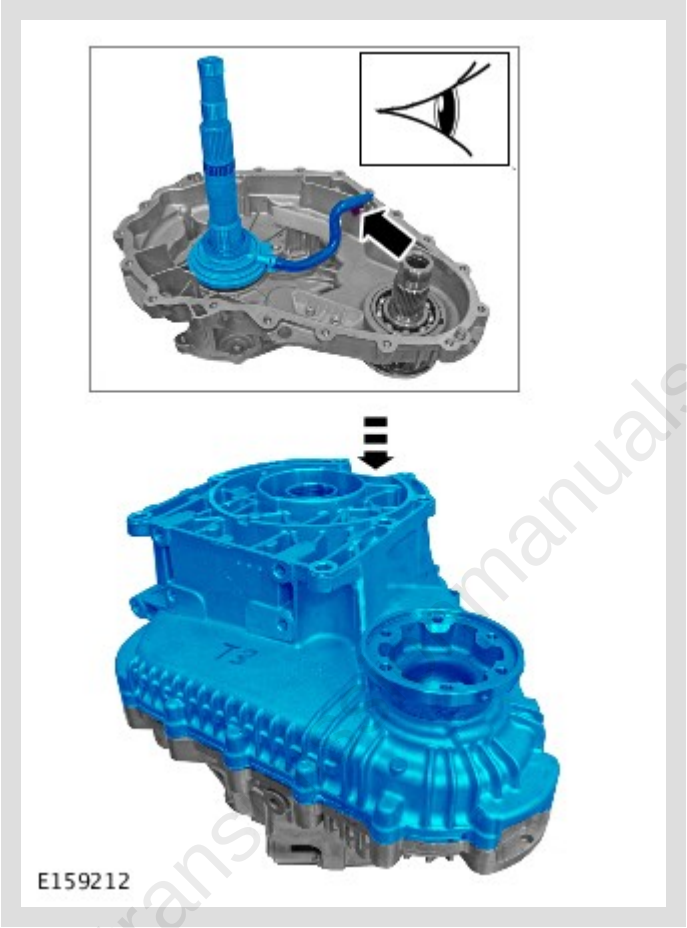

Install the front half of the transfer case.

17.

CAUTION:

Care must be taken when turning the transfer case over. The transfer case halves must not be allowed to separate.

With assistance, release the transfer case and secure with its transmission mating face down on a flat surface.

18.

CAUTION:

Only tighten the bolts finger-tight at this stage.

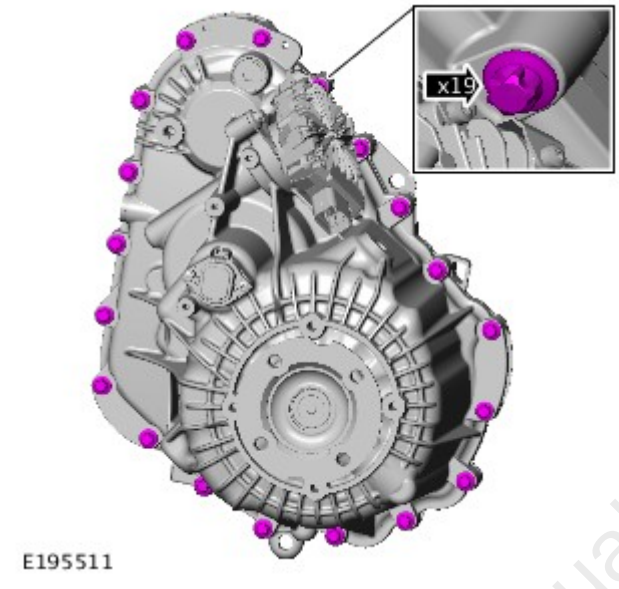

Install the 19 transfer box case bolts.

19.

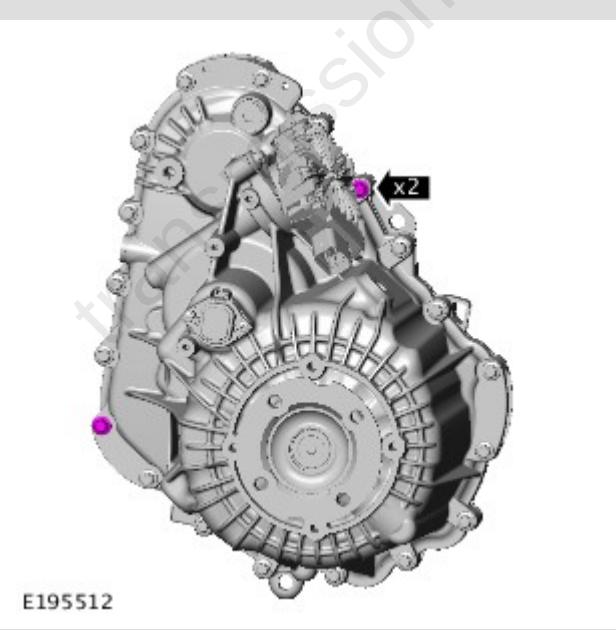

Torque: **10 Nm**

20.

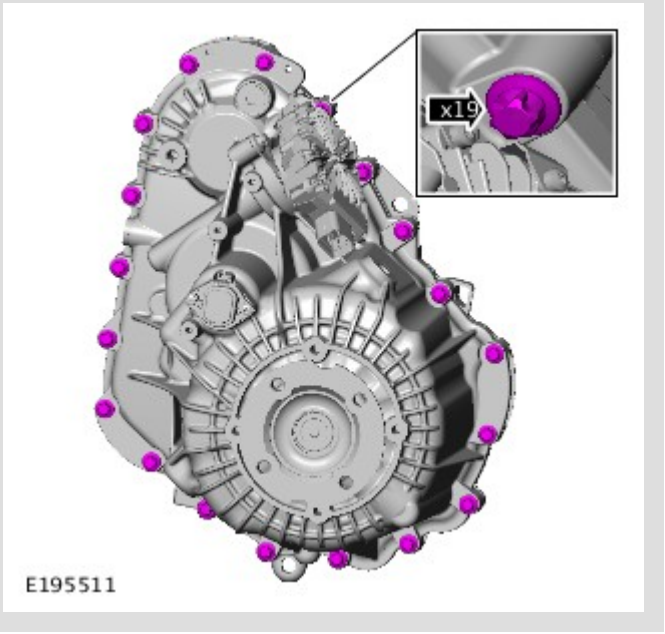

Fully tighten the 19 transfer box case bolts.

Torque: **35 Nm**

21.

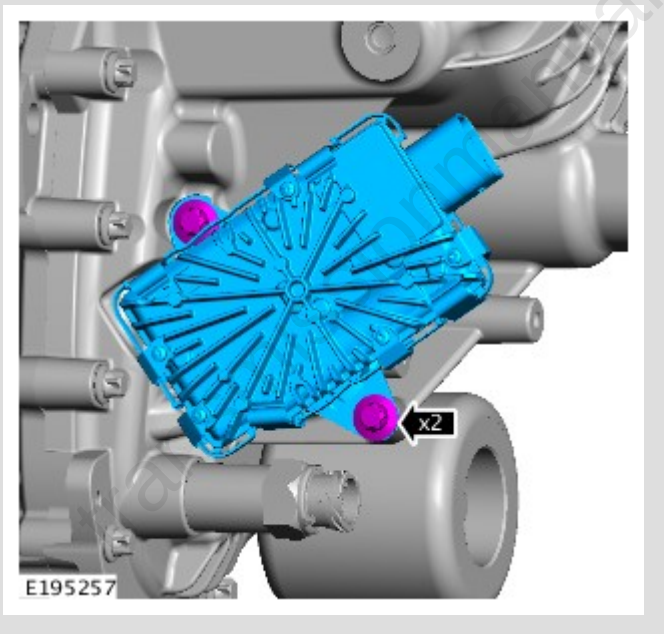

Install the motor.

Torque: **35 Nm**

22.

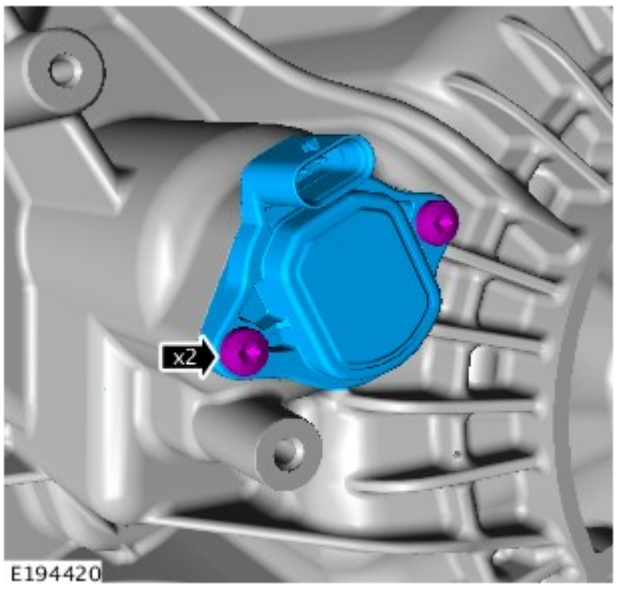

Remove the sensor.

Torque: **5 Nm**

23.

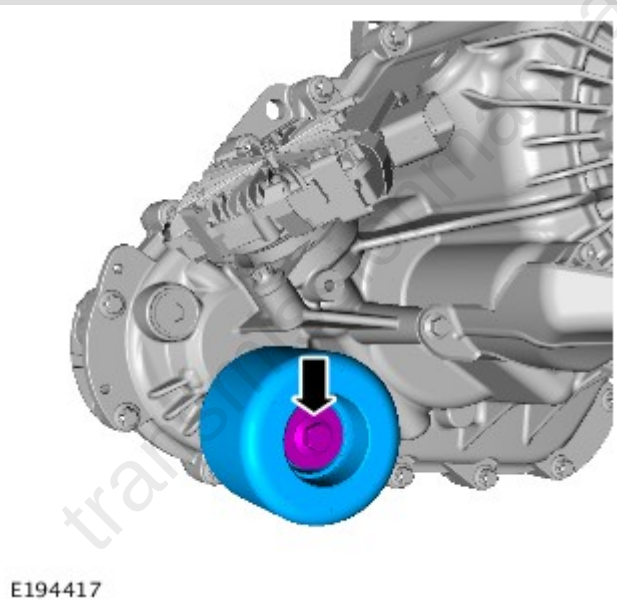

Torque: **75 Nm**

transmissionmanuals.com

24.

NOTE:

This step is only required if previously removed.

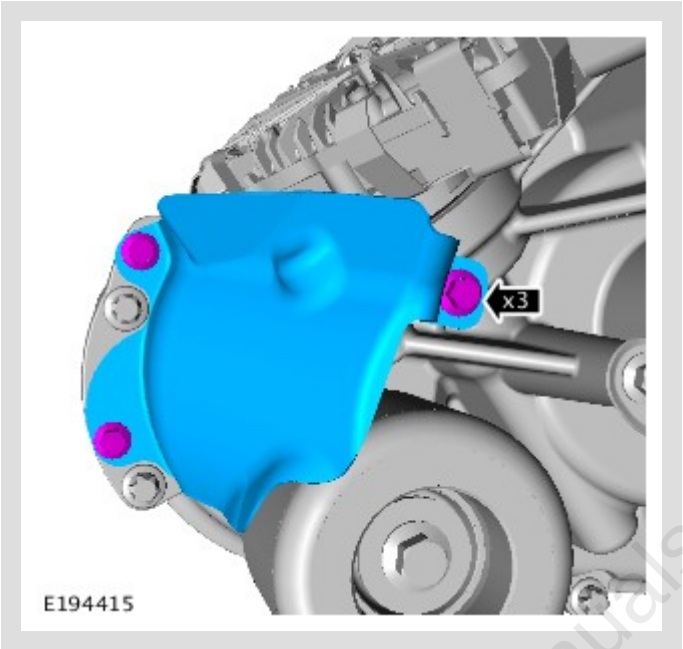

Install the heat shield.

Torque: **8 Nm**

transmissionmanuals.com

25.

NOTE:

This step is only required if previously removed.

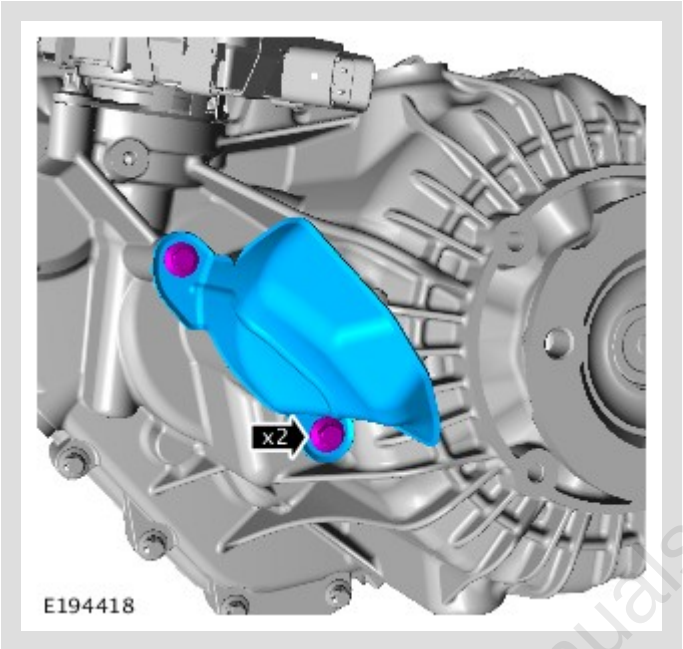

Install the heat shield.
Torque: **8 Nm**

26. With assistance, release the transfer case from the flat surface.

27. Install the transfer case.
Refer to: Transfer Case - V6 S/C 3.0L Petrol (308-07 Transfer Case - [+] Twin Speed Transfer Case, Installation).
Refer to: Transfer Case - TDV6 3.0L Diesel (308-07 Transfer Case - [+] Twin Speed Transfer Case, Installation).
Refer to: Transfer Case - INGENIUM I4 2.0L Diesel (308-07 Transfer Case - [+] Twin Speed Transfer Case, Installation).

28. Connect the battery ground cable.
Refer to: Specifications (414-00 Battery and Charging System - General Information, Specifications).

transmissionmanuals.com

29.

- Connect the Land Rover approved diagnostic equipment.
- Start the diagnostic service function "transfer case-transfer case control module replacement".
- Start the service function "transfer case-absolute position sensor replacement".
- Clear any Diagnostic Trouble Codes (DTCs) after calibration and check for correct operation.

transmissionmanuals.com

PUBLISHED: 15-AUG-2016
2022.0 DEFENDER (LE), 308-07

FOUR-WHEEL DRIVE SYSTEMS

TRANSFER CASE SHIFT MOTOR (G2003337)

REMOVAL AND INSTALLATION

41.30.03	MOTOR - RATIO CONTROL - RENEW	ALL DERIVATIVES	0.5	USED WITHINS

REMOVAL

NOTE:

- Some variation in the illustrations may occur, but the essential information is always correct.
- Some components shown removed for clarity.

transmissionmanuals

1. Disconnect the battery ground cable.
   Refer to: Specifications (414-00, Specifications).

2. **WARNING:**

   Make sure to support the vehicle with axle stands.

   Raise and support the vehicle.

3.

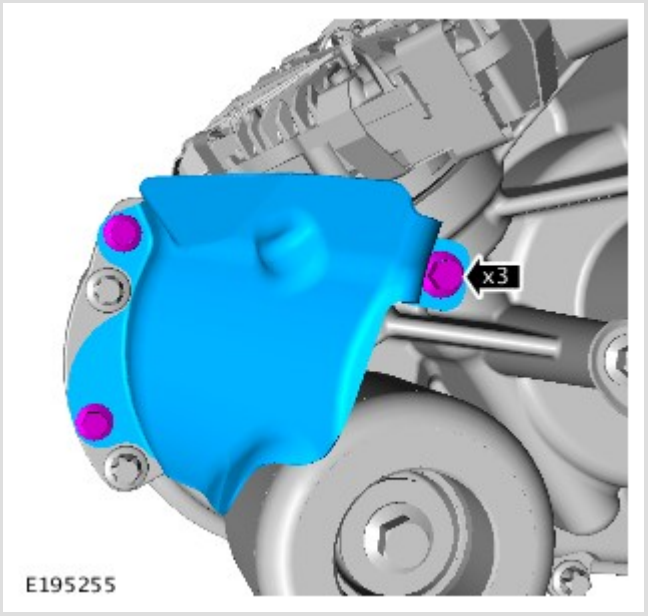

Remove the heat shield if installed.

4.

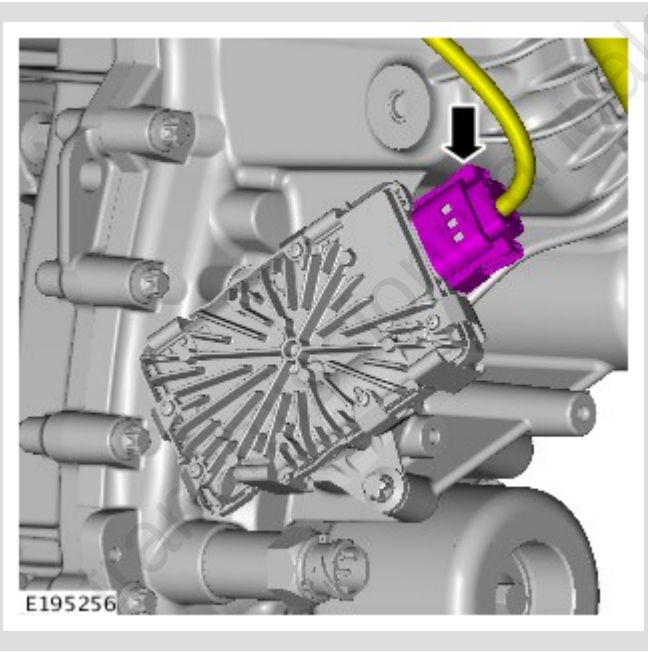

Disconnect the electrical connector.

5.

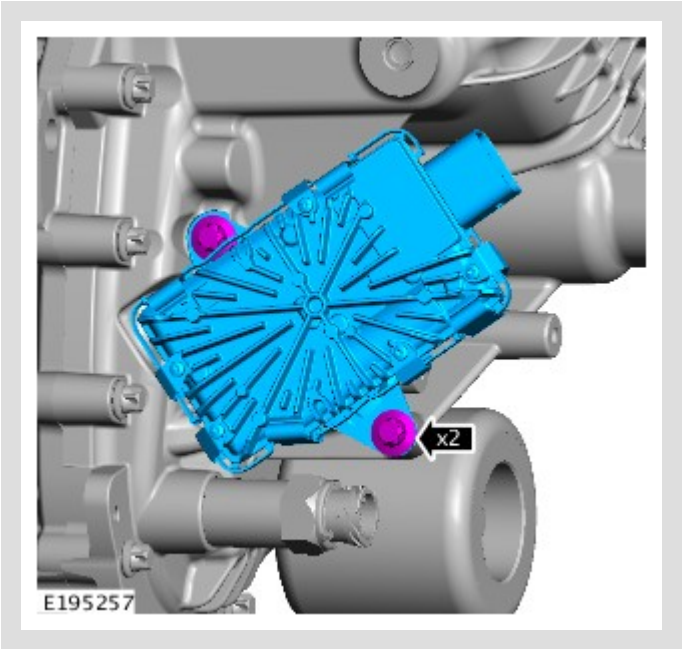

Remove the transfer case shift motor.

INSTALLATION

1.

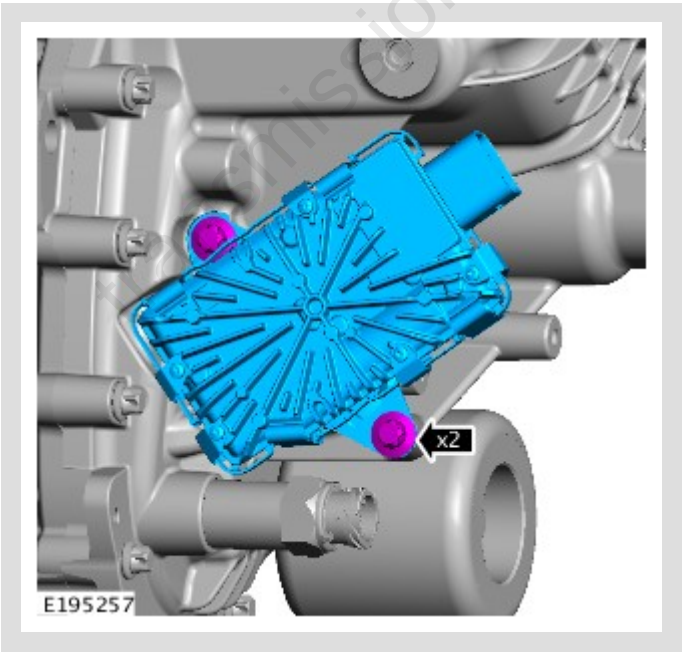

- Install the transfer case shift motor.
- *Torque:* **35 Nm**

transmissionmanuals.com

2.

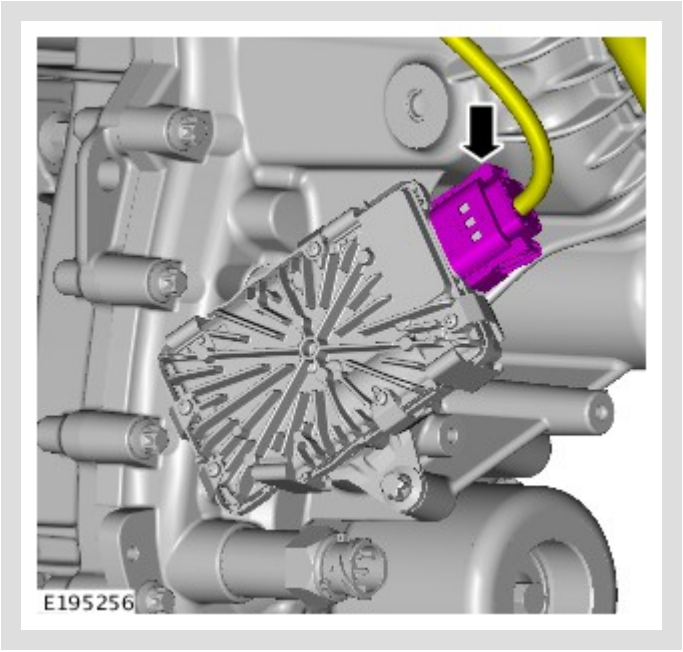

Connect the electrical connector.

3.

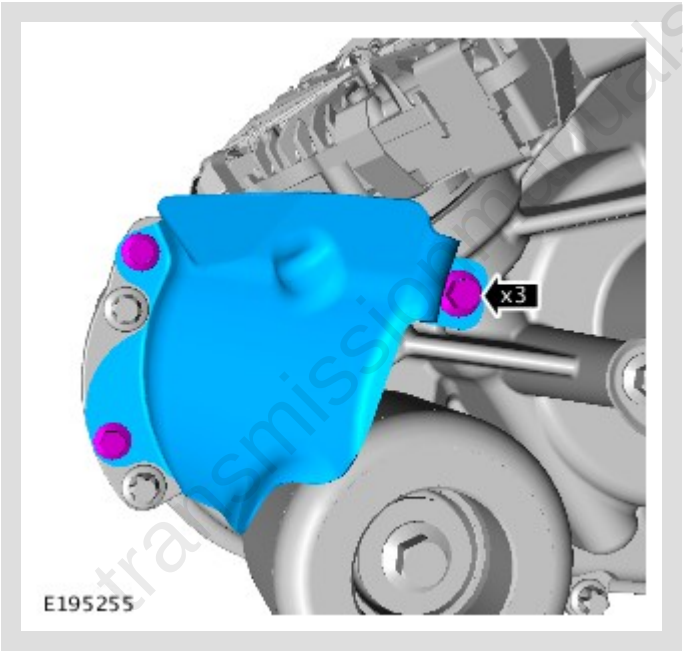

- Install the heat shield if previously removed.
- *Torque:* **8 Nm**

4.

WARNING:

Make sure to support the vehicle with axle stands.

Raise and support the vehicle.

transmissionmanuals.com

5. Connect the battery ground cable.
Refer to: Specifications (414-00, Specifications).

6.

- Connect the Land Rover approved diagnostic equipment.
- Start the diagnostic service function "transfer case-transfer case control module replacement".
- Clear any Diagnostic Trouble Codes (DTCs) after calibration and check for correct operation.

transmissionmanuals.com